ROHS

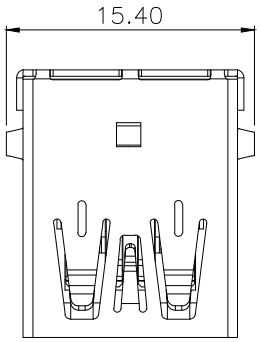

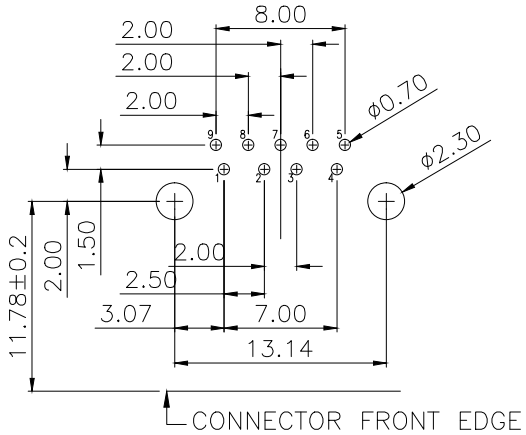

P.C.B LAYOUT
TOL:±0.05

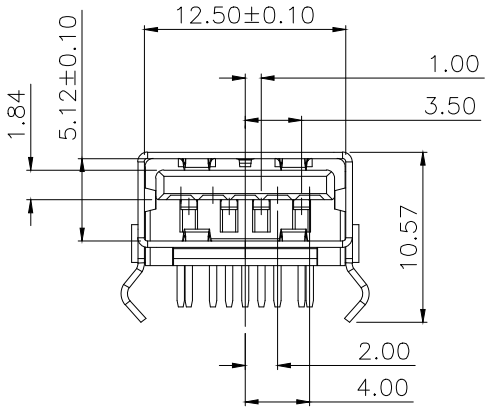

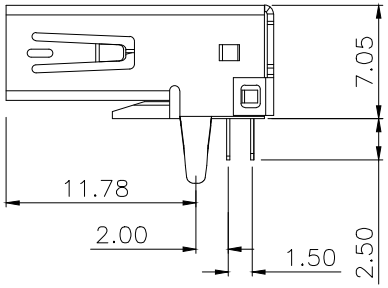

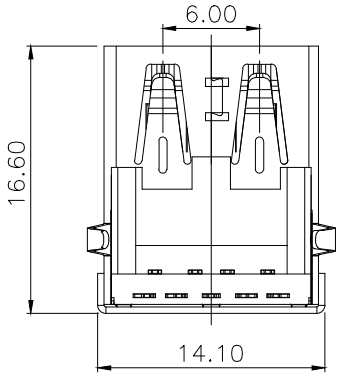

NOTES:

1.MECHANICAL:
- MATING: 35N MAX.
- WITHDRAWAL: 10N MIN.
- DURABILITY: 1500 CYCLES

2.ELECTRICAL:
- CURRENT: 1.8A Maximum for pin1 and pin4, and 0.25A for all the other pin.
- VOLTAGE: 30 Vac (rms)
- WITHSTANDING VOLTAGE: 100V AC
- CONTACT RESISTANCE:
  - 30 mΩ (Max) initial for pin1 and pin4.
  - 50 mΩ (Max) initial for all other contacts.
  - Maximum change of +10mΩ after environmental stresses.
  - Measure at 20 mV (Max) open circuit at 100 mA.
- DIELECTRIC WITHSTANDING VOLTAGE: 100V AC(RMS)
- INSULATION RESISTANCE: 100MΩ MIN.

3.ENVIRONMENTAL
- TEMPERATURE RANGE −55°C ~ +85°C

ECN NO.	REV.	DATE.	DESCRIPTION.	CHANGE.	CHECK.	APPRO.
———	A	———	NEW	———	———	———

APPROVALS		DATE	LCZY ELECTRONICS(SHEN ZHEN)CO.,LTD
DRAWN	S.L.L	2019.10.12	
CHECKED			TITLE: USB CONNECTOR
APPROVALS			PART NO. U−A−39DD−W−2

TOLERANCES ARE			ANGLE	UNIT: mm	SCALE: 1:1	PROJ:
	30~以上	±0.30	±2°	DRAWING NO.	———	SHEET 1 OF 1
	10~30	±0.25				
	5~10	±0.20				
	~ 5	±0.15				