VER	MARK	PR. BY	ECR/ECN DESCRIPTION	DATE
A		Chen	NEW RELEASE	03/13'20

RoHs

Pin	SIGNAL
1	DETECT1
2	GND
3	DP1
4	DN1
5	ACC1
6	PWR IN
7	DN2
8	DP2
9	ACC2
10	DETECT2
SHELL	GND

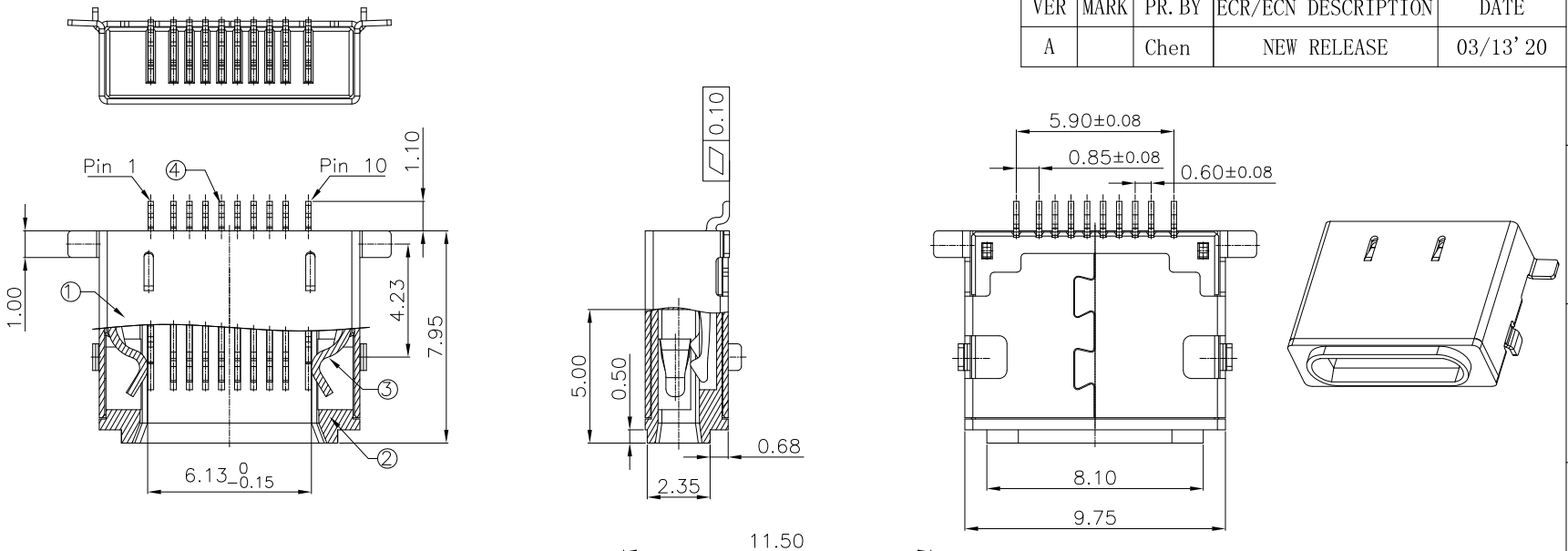

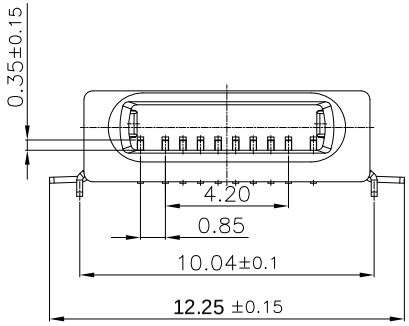

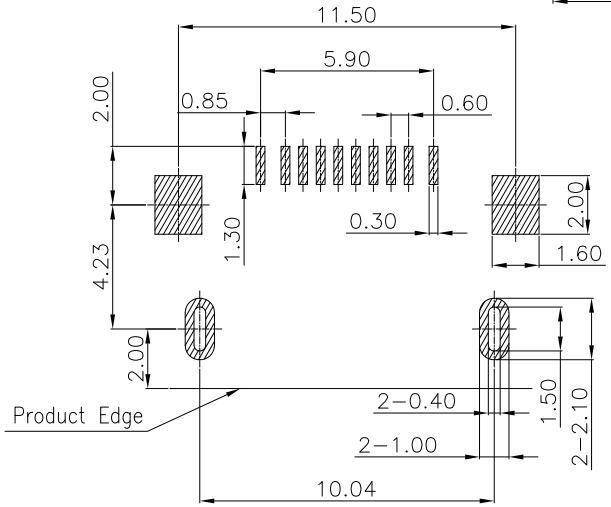

RECOMMENDED P.C.B HOLE LAYOUT
COMPONENT SIDE VIEW(TOLERANCE: +/-0.05)

公差：±0.15mm

SPECIFICATION:
1. Material & Finish:See the list;
2. Mechanical:
   2.1.Mating force:15Nf Max.;
   2.2.Unmating force:3Nf Min.;
   2.3.Durability:5000 Cycles;
3. Electrical:
   3.1.Current Rating:**2.5**A Max.;
   3.2.Voltage Rating:30V Max.;
   3.3.Dielectric Withstanding volage:500VAc;
   3.4.Contact resistance:50m Ohms Max.;
   3.5.Insulation Resistance:100M Ohms Min.;
4. Environmental:
   4.1.Operating temperature:-25° C~+85° C;
   4.2.Wetting Temperature:265±5° C,5±0.5s

NO.	PN.	DESCRIPTION
1	5010-FGBXXX	FG 10PIN 黑色 端子镀金3u"

NO.	NAME	DESCRIPTION
4	CONTACT	Copper Alloy;AuNi; T=0.20mm;
3	LATCH	Stainless Steel;SUS301,T=0.30mm;
2	HOUSING	LCP Thermoplastic,UL94V-0;
1	SHELL	Stainless Steel;SUS201,T=0.20mm;

CUSTOMER		GENERAL TOLERANCES UNLESS SPECIFIED		APPROVED BY: Song	TITLE: 端子： C2680 FG 10PIN 普通款母座	龙创中业
SIZE A4	UNITS MM[INCH]	X±0.50 .X±0.35	X°±5.0° .X°±3.0°	CHECKED BY: Talen	PART NO.: IPNF-101T-4BVS10 See the List	
SCALE 1:1	REV. 1	.XX±0.25 .XXX±0.15	.XX°±2.5° .XXX°±2.0°	DESIGN BY: Chen	DWG NO.: 5010-FGBXXX	SHEET 1/2

DWG002-A401