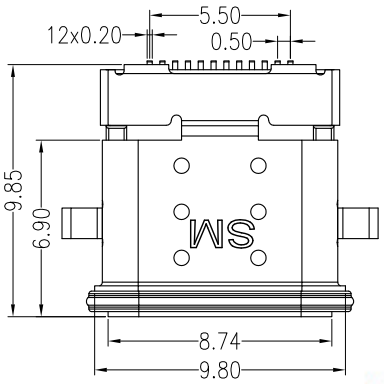

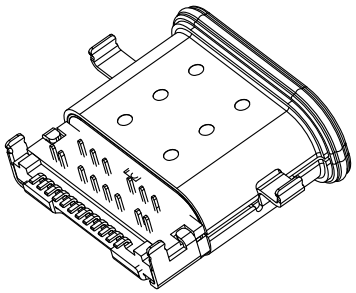

1. Material/Plated
1.1 Housing:High temperature thermoplastic,Black UL 94V-0.
1.2 Terminal:Copper Alloy,Gold Flash Plated At Contact Area, Gold Plated At Solded Area, Nickel Underplated Overall
1.3 Shell-1:Stailess steel,Nickel plated
1.4 Shell-2:Stailess steel
1.5 Ring:Silicon
1.6 Epoxy:Epoxy,Black
2. Electrical Performance
2.1 Rated Voltage: 30V AC
2.2 Rated Current: 5.0A Max.
2.3 Contact Resistance: 30mΩ Max.
2.4 Insulation Resistance: 100MΩ Min.
2.5 Dielectric Strength: 100V AC
3. Mechanical Performance
3.1 Insertion Force: 5-20N
3.2 Withdraval Force: 8-20N
3.3 Durability: 10000 Cycles
4. Operating Temperature: -25° C To +85° C
5. Waterproof: IPX8

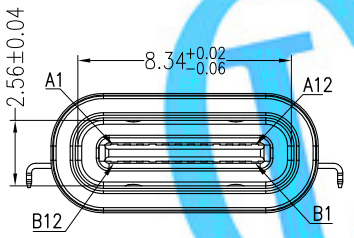

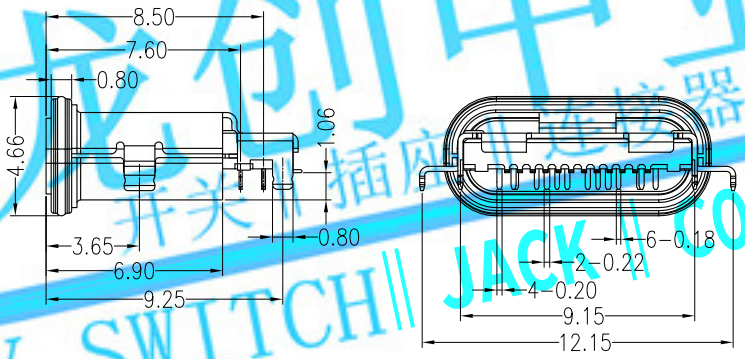

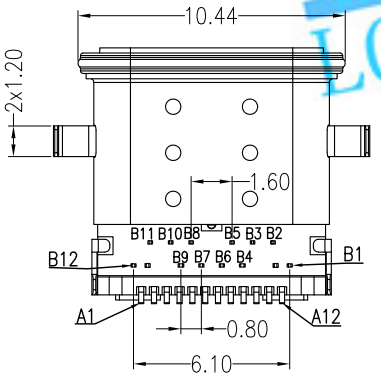

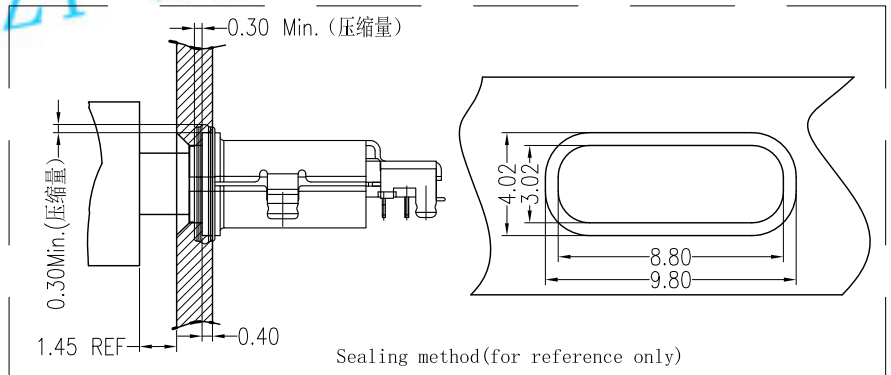

Sealing method(for reference only)

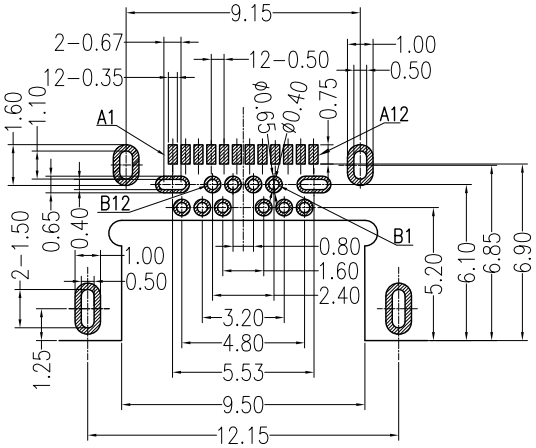

RECOMMAND PCB LAYOUT

龙创中业
开关|插座|连接器
LCZY SWITCH|JACK|CONNECTOR

REV.	DESCRIPTION	ECN NO.	NAME	DATE
A	NEW RELEASE		Tom	2018-06-13

REVISIONS

DRAWN	Tom	2018-06-13
CHECKED	Ango	2018-06-13
APPROVE	Kevin	2018-06-13
SCALE: N/A	SHEET: 1 OF 1	

DIMRNSION TOLERANCE
X
X.X ±0.35
X.XX ±0.25
X.XXX ±0.15
GENERAL ANGLE:±3°
UNIT: mm
LEVEL C31

龙创中业电子科技（东莞）有限公司

TITLE	USB TYPE-C 3.1 WATEPROOF
PART NO.	UCX-021C1C
DWG. NO.	

TK-RD-001A