ROHS

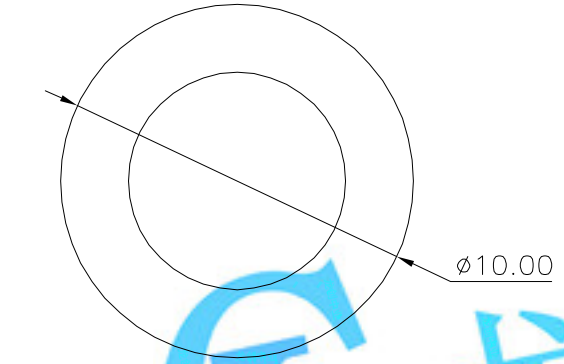

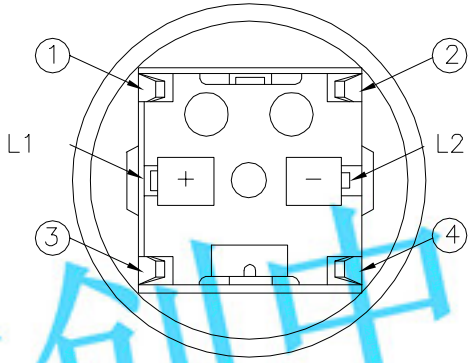

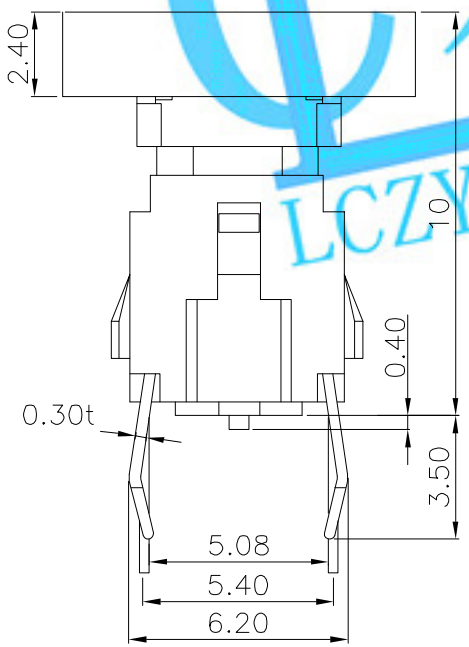

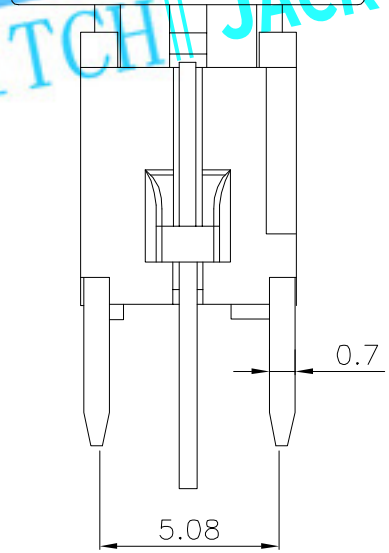

LED colour(LED颜色)	Part No. （料号）
Whiler(白色)	K6−6147D01
Red(红色)	K6−6147D02
Blue(蓝色)	K6−6147D03
Green(绿色)	K6−6147D04

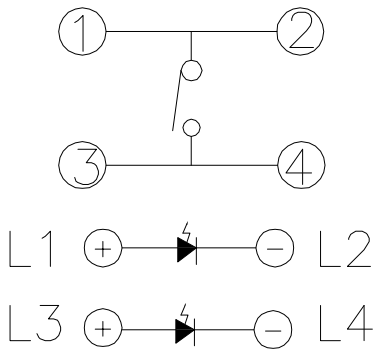

Circuit Diagram

PCBLayout(Pattern Side)

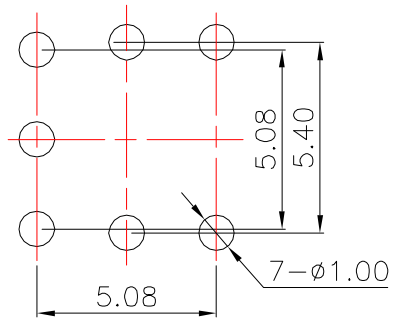

龙创电业
开关‖插座‖连接器
LCZY SWITCH‖JACK‖CONNECTOR

ITEM	PART NAME	TER'NO.	QTY.	MATERIAL	FINISHING	REMARK
②	Terminal	——	3	Phosphor bronze	Au Plating	——
①	Housing	——	1	Nylon	Black	——

APPROVALS		DATE	LCZY (HK)CO.,LIMITED		
DRAWN	J.X.Zhang	2013/11/11			
CHECKED			TITLE:	LED Tact Switch	
APPROVALS			PART NO.	K6−6147D	
TOLERANCES ARE	30~以上 ±0.30; 10~30 ±0.20; 5~10 ±0.15; ~ 5 ±0.10	ANGLE ±2°	UNIT: mm	SCALE: 1:1	PROJ:
			DRAWING NO.	——	SHEET 1 OF 1

ECN NO.	REV.	DATE.	DESCRIPTION.	CHANGE.	CHECK.	APPRO.
——	A	——	NEW	——	——	——