Pb Process Capable | RoHS Compliant 2002/95/EC | Halogen Free

| REV. | ECN. NO. | APPD. |
|---|---|---|
| | | |
| | | |
| | | |

# DIMENSIONS

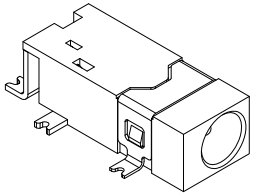

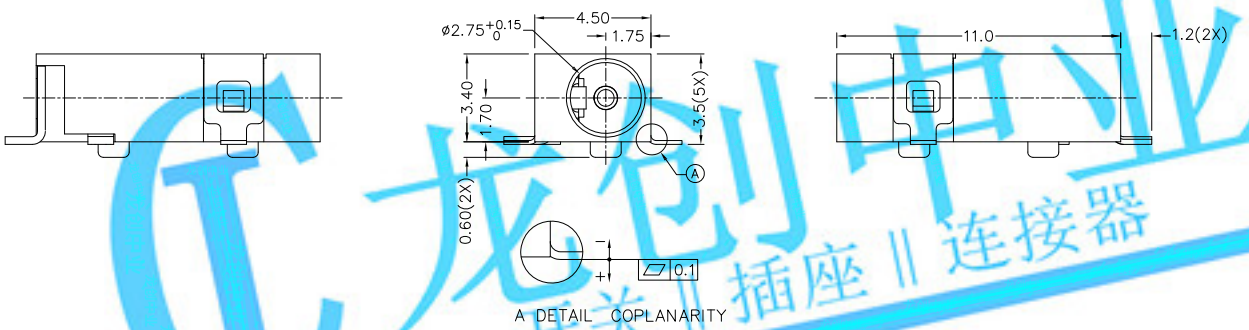


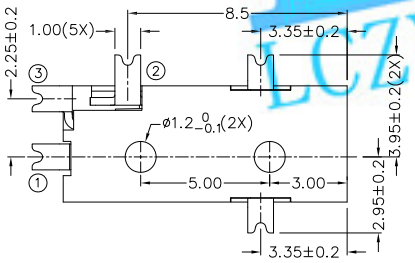


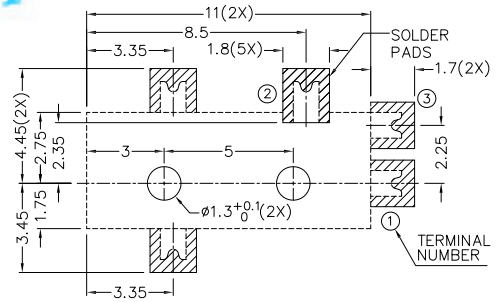


RECOMMENDED P.C.B. LAYOUT
TOLERANCE:±0.05
(TOP VIEW)

MODEL CODE:
DCT0-109DHS- A A 10 BK S 0 1
(1) (2) (3)(4)(5) (6) (7)(8) (9)
(1):Series type:SMD DC POWER JACK.
(2):Series No.
(3):Schematic option: A
(4):Center pin diameter:
A=ø0.65mm
(5):Material of housing:
10=PA10T
(6):Housing color:
BK=Black
(7):Terminal plating:
S=Silver(Ag)
(8):Special option:
0=No special option
(9):Packing mode:
1=Reel packing

Specification:
1.Rating : 2.5A/16V DC Max.
2.Contact resistance: ≤30mΩ
After test:≤60mΩ
3.Insulation resistance: ≥100MΩ (DC500V).
After test:≥50MΩ
4.Withstanding voltage: 500VAC.
5.Insertion and extraction force: 0.3~3Kgs..
6.Life test: 5,000cycles min.
7.Operation temperature range:-25℃~85℃.

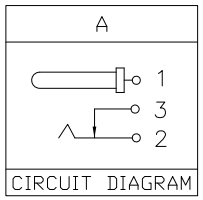


| MODEL NO. | A |
|---|---|
| CENTER PIN | ø0.65mm |

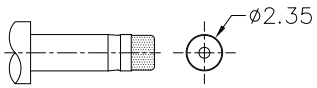


DC MATE PLUG

Bill of materials:

| NO. | PARTS | MATERIAL | Q'TY | FINISHING |
|---|---|---|---|---|
| 5 | TERMINAL 1 | BRASS | 1 | SILVER PLATED |
| 4 | TERMINAL 2 | COPPER ALLOY | 1 | SILVER PLATED |
| 3 | TERMINAL 3 | BRASS | 1 | SILVER PLATED |
| 2 | SHIELD | COPPER ALLOY | 1 | NICKEL PLATED |
| 1 | HOUSING | PA10T | 1 | UL94V-0 |

| TOLERANCE | ANGLES |
|---|---|
| ±0.3 | ±2° |

UNITS mm
MAT'L SEE NOTE
FINISH SEE NOTE
Q'TY

THESE DRAWINGS AND SPECIFICATIONS ARE THE PROPERTY OF ACCURATE INNOTECH INC AND SHALL NOT BE REPRODUCED, COPIED OR USED IN ANY MANNER WITHOUT THE PRIOR WRITTEN CONSENT OF ACCURATE INNOTECH INC.

LONGCHUANG ZHONGYE (HK)CO.,LIMITED

TITLE: SMD DC POWER JACK
PART NO.: DCT0-109DHS
DR: Ricky 2018/10/11
DWG NO.: AT0-109DHS
CHKD: Ricky 2018/10/11
APPD:

| SCALE | SHEET | REV. | CUSTOMER DRAWING |
|---|---|---|---|
| 1:1 | 1/1 | A | |

龙创中业 开关 插座 连接器 LCZY SWITCH