Pb Process Capable

RoHS Compliant 2002/95/EC

Halogen Free

REV.	ECN. NO.	APPD.

DIMENSIONS

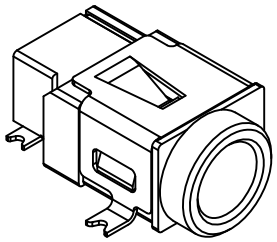

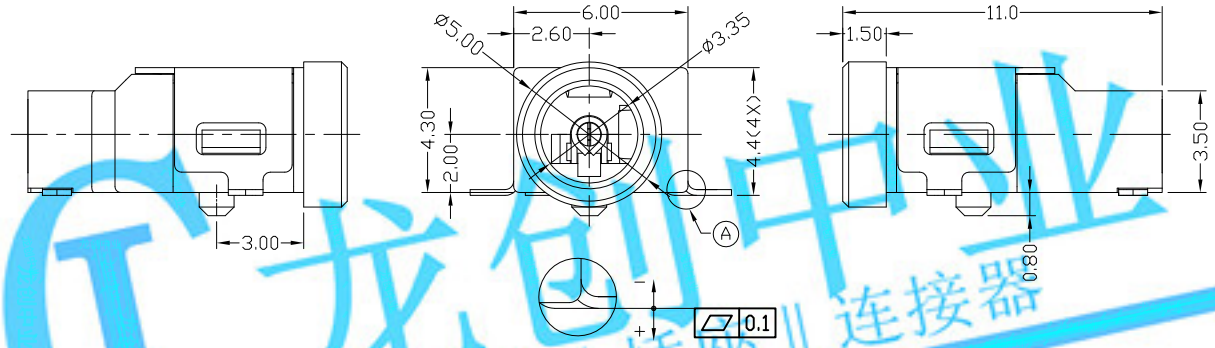

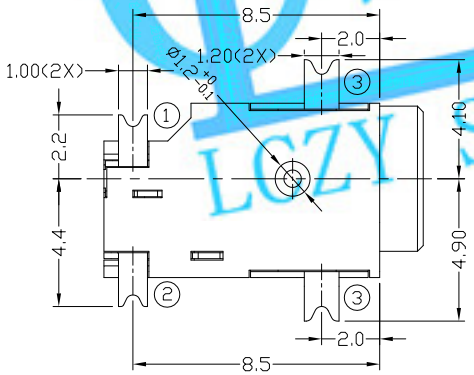

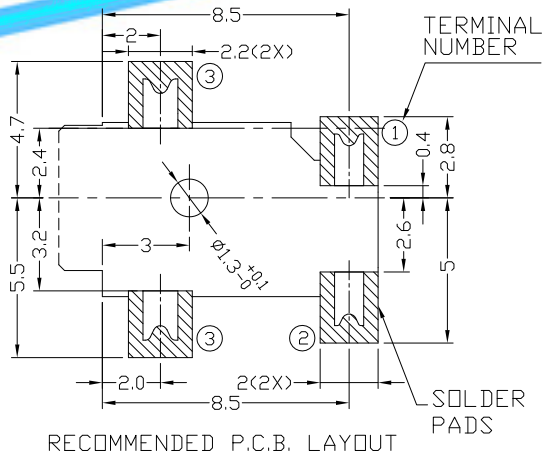

RECOMMENDED P.C.B. LAYOUT
TOLERANCE:±0.05
(TOP VIEW)

MODEL CODE:
DCT0-00042D- Z Y 10 BK S 0 1
(1) (2) (3)(4)(5) (6) (7)(8) (9)
(1):Series type:SMD DC POWER JACK.
(2):Series No.
(3):Schematic option: Z
(4):Center pin diameter:
Y=ø0.8mm
(5):Material of housing:
10=PA10T
(6):Housing color:
BK=Black
(7):Terminal plating:
S=Silver(Ag)
(8):Special option:
0=No special option
(9):Packing mode:
1=Reel packing

Specification:
1.Rating : 2.5A/16V DC Max.
2.Contact resistance: ≤30mΩ
After test:≤60mΩ
3.Insulation resistance: ≥100MΩ (DC500V).
After test:≥50MΩ
4.Withstanding voltage: 500VAC.
5.Insertion and extraction force: 0.3~3Kgs..
6.Life test: 5,000cycles min.
7.Operation temperature range:-25℃~85℃.

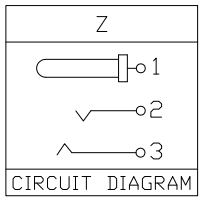

CIRCUIT DIAGRAM

MODEL NO.	Y
CENTER PIN	ø0.8mm

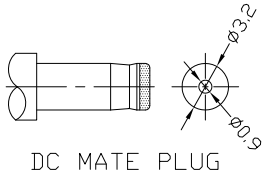

DC MATE PLUG

Bill of materials:

NO.	PARTS	MATERIAL	Q'TY	FINISHING
4	TERMINAL 1	BRASS	1	SILVER PLATED
3	TERMINAL 2	COPPER ALLOY	1	SILVER PLATED
2	TERMINAL 3	COPPER ALLOY	1	SILVER PLATED
1	HOUSING	PA10T	1	UL94V-0

TOLERANCE	ANGLES
±0.3	±2°

UNITS mm
MAT'L SEE NOTE
FINISH SEE NOTE
Q'TY

THESE DRAWINGS AND SPECIFICATIONS ARE THE PROPERTY OF ACCURATE INNOTECH INC AND SHALL NOT BE REPRODUCED, COPIED OR USED IN ANY MANNER WITHOUT THE PRIOR WRITTEN CONSENT OF ACCURATE INNOTECH INC.

LONGCHUANG ZHONGYE (HK)CO.,LIMITED

TITLE: SMD DC POWER JACK
PART NO.: DCT0-00042D
DR: Ricky 2018/10/01
DWG NO.: AT0-00042D
CHKD: Ricky 2018/10/01
APPD:

SCALE	SHEET	REV.	CUSTOMER DRAWING
1:1	1/1	A	

龙创中业 开关 插座 连接器 LCZY SWITCH