Pb Process Capable

RoHS Compliant 2002/95/EC

REV.	ECN. NO.	APPD.

DIMENSIONS

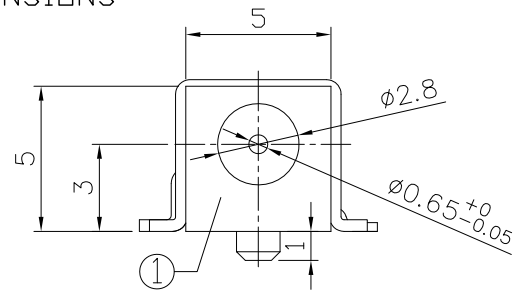

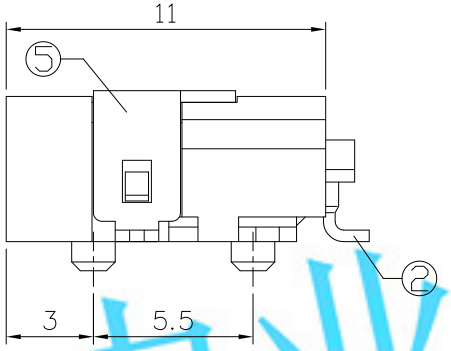

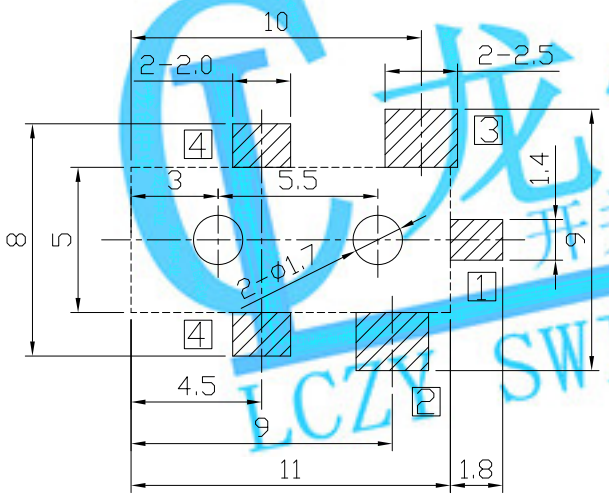

RECOMMENDED P.C.B. LAYOUT
UNSPECIFIED TOLERANCE:±0.05
(COPPER-SIDED VIEW)

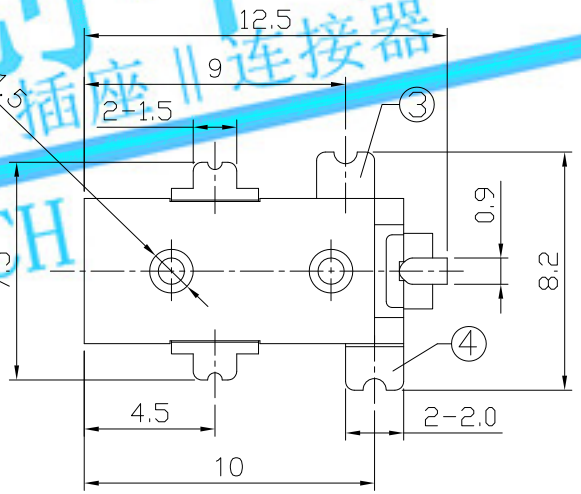

MODEL CODE:

DCB0-0011C- A A 9T BK S 0 1
(1) (2) (3)(4) (5) (6) (7)(8) (9)

(1):Series type:SMD DC POWER JACK.
(2):Series No.
(3):Schematic option: A, B
(4):Center pin diameter:
A=ø0.65
(5):Material of housing:
9T=PA9T(Standard)
(6):Housing color:
BK=Black
(7):Terminal plating:
S=Silver(Ag)
(8):Special option:
0=No special option
(9):Packing mode:
1=Reel packing

Specification:

1.Rating : DC 30V 1A;
2.Contact resistance: ≤50mΩ;
After test:≤100mΩ;
3.Insulation resistance: ≥100MΩ (DC500V);
After test:≤50MΩ;
4.Withstanding voltage: 500VAC ;
5.Insertion and extraction force: 3-30N;
6.life test: 5,000 cycles;
7.Operation temperature range:-20°C~70°C;
8.Preservative temperature range:-40°C~85°C;

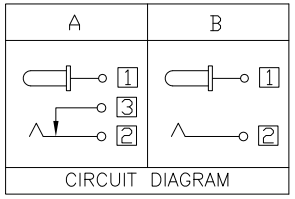

CIRCUIT DIAGRAM

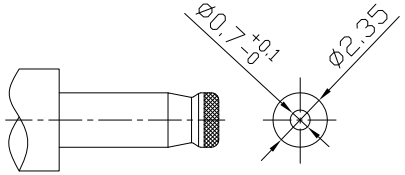

DC MATE PLUG

龙创中业 开关 插座 连接器 LCZY SWITCH

○: ITEM NO. □: TERMINAL NO.

NO.	PARTS	MATERIAL	Q'TY	FINISHING
⑤	Shell 4	Brass t0.4	1	Silver plating
④	Shunt terminal 3	Brass t0.4	1	Silver plating
③	Tip spring 2	Stainless steel t0.25	1	Silver plating
②	Center pin 1	Brass	1	Silver plating
①	Housing	PA9T UL94V-0	1	Black

TOLERANCE	ANGLES
±0.3	±2°

THESE DRAWINGS AND SPECIFICATIONS ARE THE PROPERTY OF ACCURATE INNOTECH INC AND SHALL NOT BE REPRODUCED, COPIED OR USED IN ANY MANNER WITHOUT THE PRIOR WRITTEN CONSENT OF ACCURATE INNOTECH INC.

UNITS mm
MAT'L SEE NOTE
FINISH SEE NOTE
Q'TY

LONGCHUANG ZHONGYE (HK)CO.,LIMITED

TITLE: SMD DC POWER JACK	PART NO.: DCB0-0011C
DR: Ricky 2018/06/13	DWG NO.: AB0-0011C
CHKD: Ricky 2018/06/13	SCALE 1:1 / SHEET 1/1 / REV. A / CUSTOMER DRAWING
APPD:	