REV.	ECN. NO.	APPD.

Pb Process Capable

RoHS Compliant 2002/95/EC

DIMENSIONS

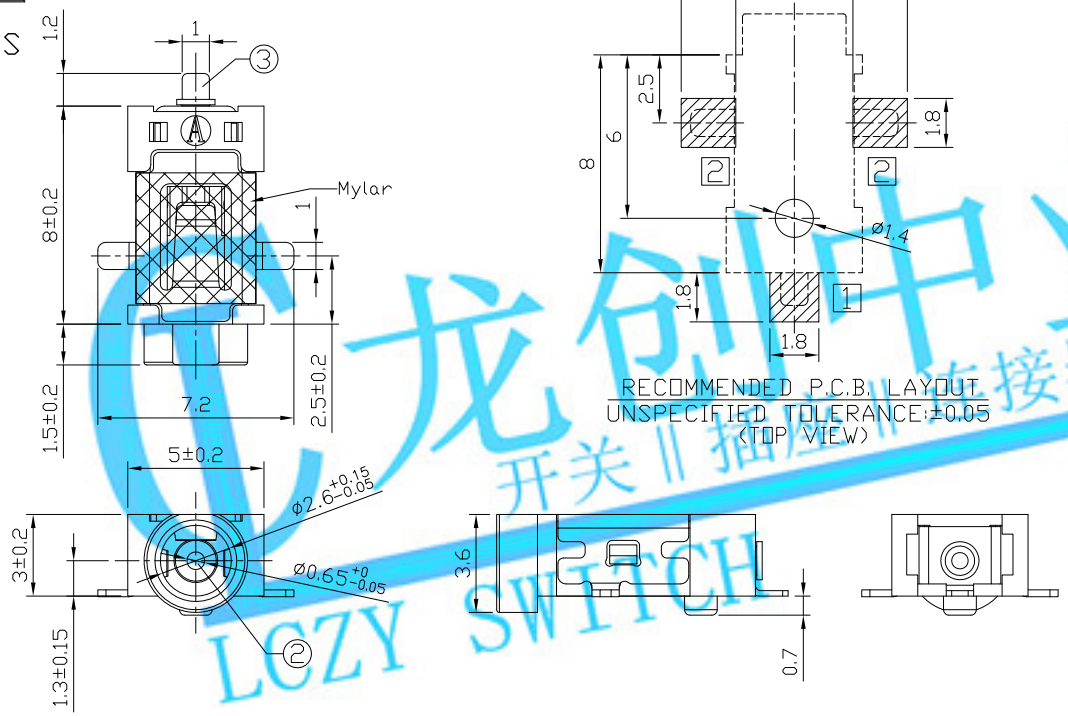

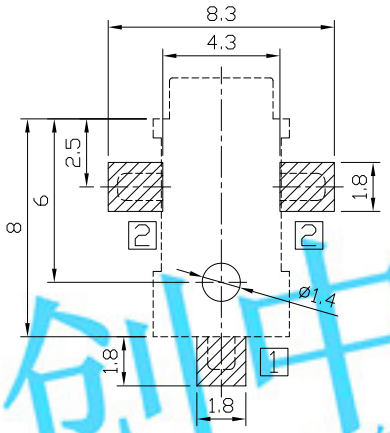

RECOMMENDED P.C.B. LAYOUT
UNSPECIFIED TOLERANCE:±0.05
(TOP VIEW)

MODEL CODE:

DCB0-0128A- B A LC BK S 0 1

(1) (2) (3)(4) (5) (6)(7)(8) (9)

(1):Series type:SMD DC POWER JACK.
(2):Series No.
(3):Schematic option: B
(4):Center pin diameter:
A=ø0.65
(5):Material of housing:
LC=LCP(Standard)
(6):Housing color:
BK=Black(Standard)
(7):Terminal plating:
S=Silver(Ag)(Standard)
(8):Special option:
0=No special option
M=With Mylar
(9):Packing mode:
1=Reel packing

Specification:
1.Rating : DC 6V 2A.
2.Contact resistance: ≤50mΩ
After test:≤100mΩ
3.Insulation resistance: ≥100MΩ (500VDC).
After test:≥50MΩ
4.Withstand voltage: 500VAC.
5.Insertion and extraction force: 3N~30N.
6.life test: 5000cycles min.
7.Operation temperature range:-20℃~70℃
8.Preservative temperature range:-40℃~85℃

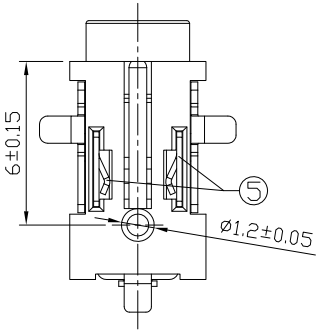

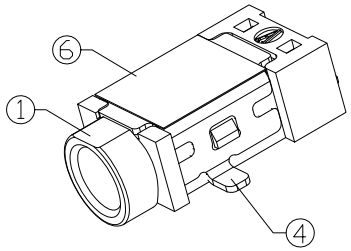

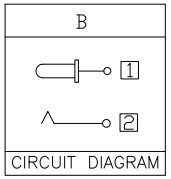

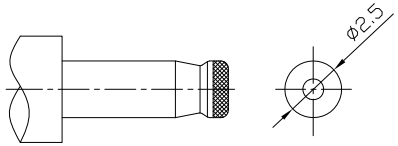

DC MATE PLUG

○: ITEM NO. □: TERMINAL NO.

NO.	PARTS	MATERIAL	Q'TY	FINISHING
⑥	Mylar	Polyimide 0.05t	1	
⑤	Spring	Stainless steel t=0.2	2	
④	Tip spring [2]	Phosphor bronze t=0.25	1	Silver plating
③	Center pin terminal [1]	Brass t=0.2	1	Silver plating
②	Center pin [1]	Brass	1	Silver plating
①	Housing	LCP UL 94V-0	1	Black

TOLERANCE	ANGLES
±0.3	±2°

UNITS mm
MAT'L SEE NOTE
FINISH SEE NOTE
Q'TY

THESE DRAWINGS AND SPECIFICATIONS ARE THE PROPERTY OF ACCURATE INNOTECH INC AND SHALL NOT BE REPRODUCED, COPIED OR USED IN ANY MANNER WITHOUT THE PRIOR WRITTEN CONSENT OF ACCURATE INNOTECH INC.

LONGCHUANG ZHONGYE (HK)CO.,LIMITED

TITLE: SMD DC POWER JACK	PART NO.: DCB0-0128A
DR: Ricky 2018/06/26	DWG NO.: AB0-0128A
CHKD: Ricky 2018/06/26	SCALE 1:1 / SHEET 1/1 / REV. A / CUSTOMER DRAWING
APPD:	

龙创中业 开关 插座 连接器 LCZY SWITCH