Pb Process Capable

RoHS Compliant 2002/95/EC

REV.	ECN. NO.	APPD.

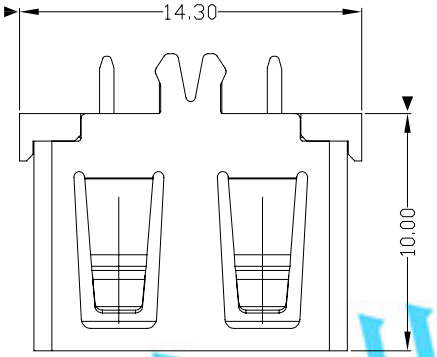

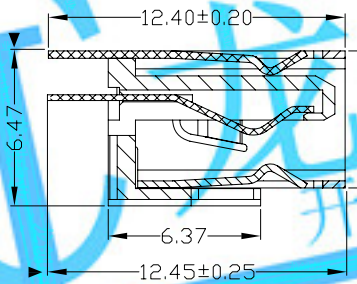

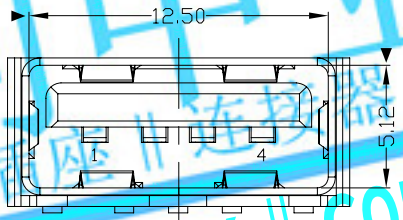

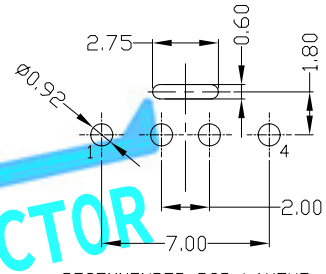

RECOMMENDED PCB LAYOUT

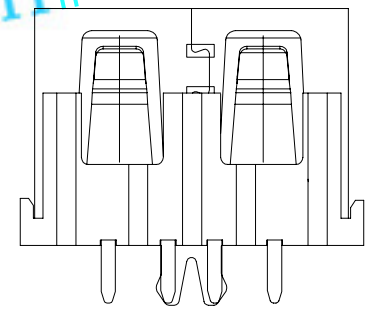

NOTES:

1. ELECTRICAL:
   1) VOLTAGE CURRENT RATING:2AMP,30V AC;
   2) INSULATION RESISTANCE: 1000MΩ MIN;
   3) CONTACT RESISTANCE: 30mΩ MAX;
   4) WITHSTANDING VOLTAGE: 500V AC;
   5) OPERATING TEMPERATURE:-55°C TO +85°C.
2. Mechanical:
   1) Mating Force: 35N MAX
   2) Unmating Force: 10N MIN.
3. NOTE:1.DIMENSIONS MARKED "▼" TO BE CHECKED BY Q.C & IPQC.

4.PART NO.

USAF-04✱N-✱✱P803

1:Au 1U"
6:Au 30U"

W:WHITE
B:BLACK

1:PBT
2:PA6T
3:PA9T
4:LCP
5:PA46
6:PA66

Bill of materials:

NO	PARTS	MATERIAL	QTY	FINISHING
3	HOUSING	PBT/PA66	1	UL94V-0
2	SHELL	COPPER ALLOY	1	PLATED NICKEL
1	TERMINAL	COPPER ALLOY	4	PLATED GOLD/TIN

X. ±0.35	X.° ±2°
.X ±0.3	.X° ±1°
.XX ±0.25	.XX°
.XXX ±0.15	.XXX°

UNITS mm

MAT'L SEE NOTE

FINISH SEE NOTE

Q'TY

THESE DRAWINGS AND SPECIFICATIONS ARE THE PROPERTY OF ACCURATE INNOTECH INC .AND SHALL NOT BE REPRODUCED. COPIED OR USED IN ANY MANNER WITHOUT THE PRIOR WRITTEN CONSENT OF ACCURATE INNOTECH INC.

LONGCHUANG ZHONGYE (HK)CO.,LIMITED

TITLE: USB AF 180度 插板(10.0)无卷边

PART NO.: USAF-04✱N-✱✱P803

DR: gan 2013/03/18

DWG NO.: AII-P803

CHKD: gan 2013/03/18

APPD:

SCALE	SHEET	REV.	
1:1	1/1	B	CUSTOMER DRAWING

龙创中业 开关 || 插座 || 连接器 LCZY SWITCH || JACK || CONNECTOR