REV	LTR	DESCRIPTION	DATE	REVISER	APPD

Pb Process Capable

RoHS Compliant 2002/95/EC

PIN NUMBER	SIGNAL NAME
1	VBUS
2	D-
3	D+
4	ID
5	GND
6	MICB_SSTX-
7	MICB_SSTX+
8	GND_DRAIN
9	MICB_SSRX-
10	MICB_SSRX+
Shell	Shield

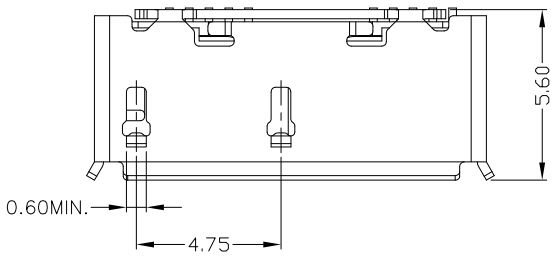

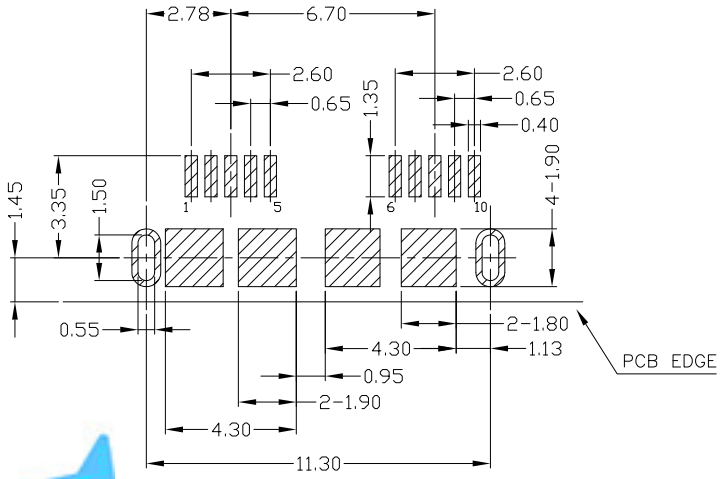

RECOMMENDED P.C.B LAYOUT

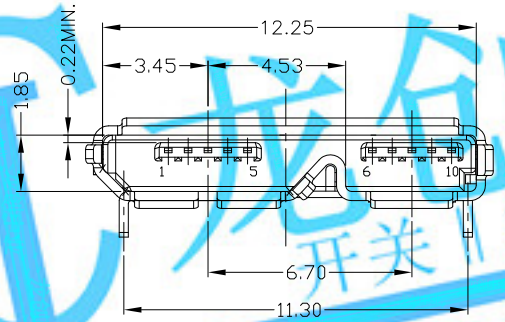

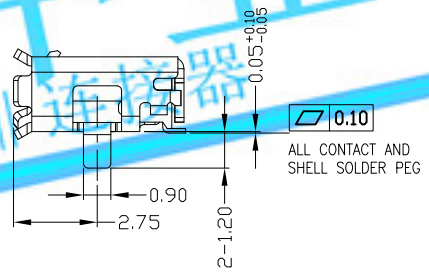

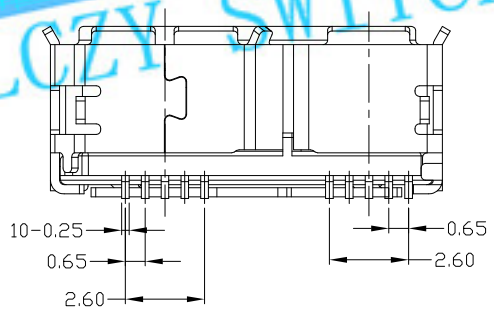

NOTES:

1. ELECTRICAL:
   1) VOLTAGE CURRENT RATING:1AMP,30V AC;
   2) INSULATION RESISTANCE: 100MΩ MIN;
   3) CONTACT RESISTANCE: 30mΩ MAX;
   4) WITHSTANDING VOLTAGE: 500V AC;
   5) OPERATING TEMPERATURE:-40°C TO +85°C.
2. Mechanical:
   1) Mating Force: 35N MAX
   2) Unmating Force: 10N MIN.
3. DIMENSIONS MARKED "▼" TO BE CHECKED BY Q.C & IPQC.
4. PART NO.

MUYF-10*N-4BHW02

1:Au 1U"
5:Au 15U"
6:Au 30U"

W:WHITE
B:BLACK

1:PBT
2:PA6T
3:PA9T
4:LCP

Bill of materials:

NO	PARTS	MATERIAL	QTY	FINISHING
3	SHELL	STAINLESS STEEL	1	PLATED NICKEL
2	HOUSING	LCP+30%GF	1	UL94V-0
1	TERMINAL	COPPER ALLOY	10	PLATED GOLD/TIN

X. ±0.35	X.° ±2°	UNITS mm	LONGCHUANG ZHONGYE (HK)CO.,LIMITED
.X ±0.3	.X° ±1°	MAT'L SEE NOTE	TITLE: MICRO USB 3.0 B TYPE F DIP SHELL脚长1.20MM脚距11.30MM
.XX ±0.25	.XX°		PART NO.: MUYF-10*N-4BHW02
.XXX ±0.15	.XXX°	FINISH SEE NOTE	DR: gan 2017/08/06
		Q'TY	CHKD: gan 2017/08/06
			APPD:

DWG NO.: AII-HW02

SCALE	SHEET	REV.	CUSTOMER DRAWING
1:1	1/1	B	

THESE DRAWINGS AND SPECIFICATIONS ARE THE PROPERTY OF ACCURATE INNOTECH INC ,AND SHALL NOT BE REPRODUCED, COPIED OR USED IN ANY MANNER WITHOUT THE PRIOR WRITTEN CONSENT OF ACCURATE INNOTECH INC

龙创中业 开关 | 插座 | 连接器 LCZY SWITCH