Pb Process Capable

RoHS Compliant 2002/95/EC

REV.	ECN. NO.	APPD.

PIN NUMBER	SIGNAL NAME
1	VBUS
2	D-
3	D+
4	GND
5	STDA_SSRX-
6	STDA_SSRX+
7	GND_DRAIN
8	STDA_SSTX-
9	STDA_SSTX+
Shell	Shield

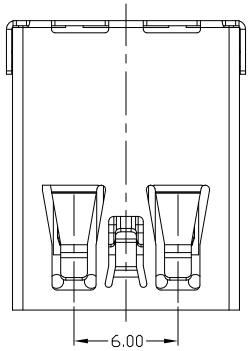

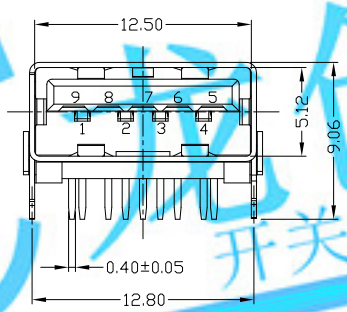

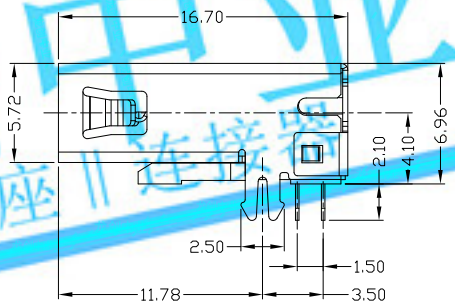

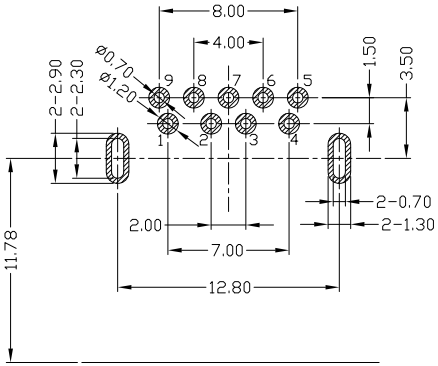

RECOMMENDED PCB LAYOUT

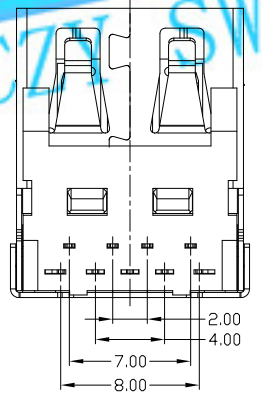

NOTES:

1. ELECTRICAL:
   1) CURRENT RATING:1.5 AMP;
   2) INSULATION RESISTANCE: 100MΩ MIN;
   3) CONTACT RESISTANCE: 30mΩ MAX;
   4) WITHSTANDING VOLTAGE: 100V AC;
   5) OPERATING TEMPERATURE:-40°C ~ +85°C.
2. Mechanical:
   1) Mating Force: 35N MAX
   2) Unmating Force: 10N MIN.
3. DIMENSIONS MARKED "▼" TO BE CHECKED BY Q.C & IPQC.
4. PART NO.

USAF-09*N-4BLRC114

- 1:Au 1U"
- 5:Au 15U"
- 6:Au 30U"
- W:WHITE
- B:BLACK
- BL:BLUE
- 1:PBT
- 2:PA6T
- 3:PA9T
- 4:LCP

Bill of materials:

NO	PARTS	MATERIAL	QTY	FINISHING
3	SHELL	COPPER ALLOY	1	PLATED NICKEL
2	TERMINAL	COPPER ALLOY	9	PLATED GOLD/TIN
1	HOUSING	LCP+30%GF	1	UL94V-0

X. ±0.35	X.° ±2°	UNITS mm	LONGCHUANG ZHONGYE (HK)CO.,LIMITED
.X ±0.3	.X° ±1°	MAT'L SEE NOTE	TITLE: USB 3.0 AF 90度 DIP 无卷边 鱼叉脚 脚长2.1
.XX ±0.25	.XX°		PART NO.: USAF-09*N-4BLRC114
.XXX ±0.15	.XXX°	FINISH SEE NOTE	DR: gan 2016/12/1
		Q'TY	CHKD: gan 2016/12/1
			APPD:

DWG NO.: AII-RC114

SCALE	SHEET	REV.	CUSTOMER DRAWING
1:1	1/1	B	

THESE DRAWINGS AND SPECIFICATIONS ARE THE PROPERTY OF ACCURATE INNOTECH INC AND SHALL NOT BE REPRODUCED, COPIED OR USED IN ANY MANNER WITHOUT THE PRIOR WRITTEN CONSENT OF ACCURATE INNOTECH INC.

LCZH SWITCH 龙创电业 开关 插座 连接器