REV	LTR	DESCRIPTION	DATE	REVISER	APPD

Pb Process Capable

RoHS Compliant 2002/95/EC

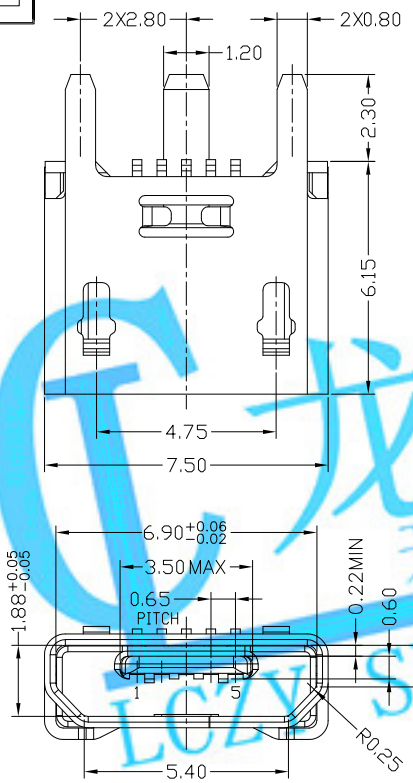

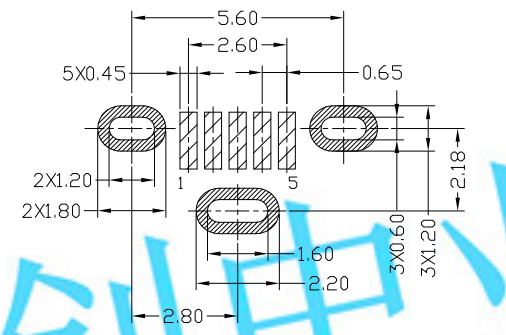

RECOMMENDED PCB LAYOUT(TOP VIEW)
GENERAL TOLERANCES:±0.05

5	GND
4	ID
3	D+
2	D-
1	VBUS
PIN	NAME
PIN ASSIGNMENT	

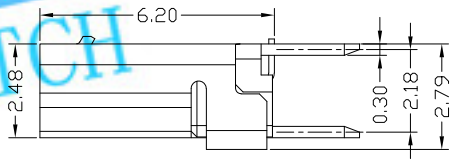

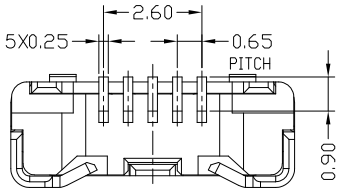

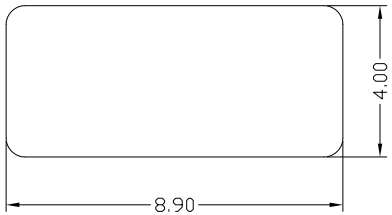

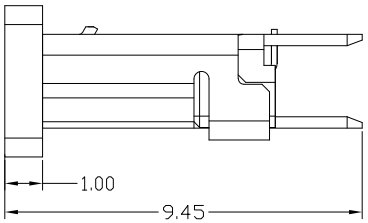

CAP DIMENSION SKETCH MAP

NOTES:

1. ELECTRICAL:
   1) VOLTAGE CURRENT RATING:PIN1&5 1.8AMP MAX / PIN2&3&4 0.5AMP MAX. ,30V AC;
   2) INSULATION RESISTANCE: 100MΩ MIN;
   3) CONTACT RESISTANCE: 30mΩ MAX;
   4) WITHSTANDING VOLTAGE: 100V AC; FOR 1 MIN.
   5) OPERATING TEMPERATURE:-30°C TO +80°C.
2. Mechanical:
   1) Mating Force: 35N MAX
   2) Unmating Force: 8N MIN.
3. DIMENSIONS MARKED "▼" TO BE CHECKED BY Q.C & IPQC.
4. PART NO.

MUYF-05*N-4BQS21

- 1:Au 1U" / 6:Au 30U"
- T:TIN / N:NICKEL
- W:WHITE / B:BLACK
- 1:PBT / 2:PA6T / 3:PA9T / 4:LCP

Bill of materials:

NO	PARTS	MATERIAL	QTY	FINISHING
5				
4	CAP	LCP+30%GF	1	UL94V-0
3	SHELL	STAINLESS STEEL	1	PLATED NICKEL
2	CONTACT	COPPER ALLOY	5	PLATED GOLD
1	HOUSING	LCP+30%GF	1	UL94V-0

X.X ±0.30	X.° ±10°
.XX ±0.20	.X° ±8°
.XXX ±0.10	.XX° ±5°

UNITS mm
MAT'L SEE NOTE
FINISH SEE NOTE
Q'TY

THESE DRAWINGS AND SPECIFICATIONS ARE THE PROPERTY OF ACCURATE INNOTECH INC .AND SHALL NOT BE REPRODUCED. COPIED OR USED IN ANY MANNER WITHOUT THE PRIOR WRITTEN CONSENT OF ACCURATE INNOTECH INC

LONGCHUANG ZHONGYE (HK)CO.,LIMITED

TITLE: MICRO USB B TYPE F 5P 180度 SMT 无翻边外壳3支脚

PART NO.: MUYF-05XN-4BQS21

DR: Ricky 2019/08/13

DWG NO.: AII-QS21

CHKD: Ricky 2019/08/13

APPD:

SCALE	SHEET	REV.	
1:1	1/1	B	CUSTOMER DRAWING

龙创中业 开关 || 插座 || 连接器 LCZY SWITCH