REV.	ECN. NO.	APPD.

Pb Process Capable

RoHS Compliant 2002/95/EC

Halogen Free

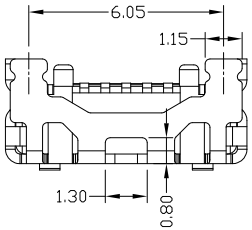

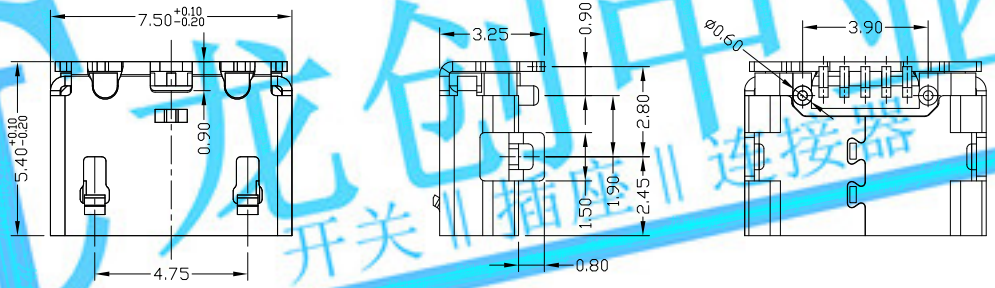

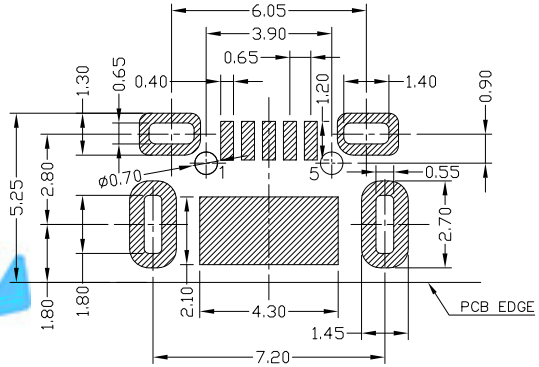

RECOMMENDED PCB LAYOUT

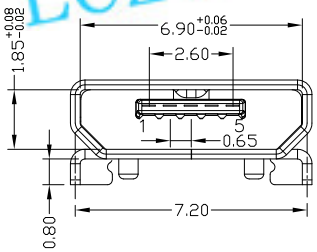

NOTES:

1.ELECTRICAL:

1)VOLTAGE CURRENT RATING:PIN1&5 1.8AMP MAX / PIN2&3&4 1AMP MAX. ,30V AC;

2)INSULATION RESISTANCE: 100MΩ MIN;

3)CONTACT RESISTANCE: 30mΩ MAX;

4)WITHSTANDING VOLTAGE: 100V AC; FOR 1 MIN.

5)OPERATING TEMPERATURE:-30°C TO +80°C.

2.Mechanical:

1)Mating Force: 35N MAX

2)Unmating Force: 10N MIN.

3.DIMENSIONS MARKED "▼" TO BE CHECKED BY Q.C & IPQC.

4.PART NO.

MUYF-05*T-4BHUA684

1:Au 1U"
6:Au 30U"

T:TIN
N:NICKEL

W:WHITE
B:BLACK

1:PBT
2:PA6T
3:PA9T
4:LCP

Bill of materials:

NO	PARTS	MATERIAL	QTY	FINISHING
3	SHELL	STAINLESS STEEL	1	PLATED TIN
2	HOUSING	LCP+30%GF	1	UL94V-0
1	TERMINAL	COPPER ALLOY	5	PLATED GOLD

X. ±0.35	X.° ±2°	UNITS mm	LONGCHUANG ZHONGYE (HK)CO.,LIMITED
.X ±0.30	.X° ±1°	MAT'L SEE NOTE	TITLE: MICRO USB B TYPE F 5P 牛角型全插 6.05 7.2有柱短针新模0.8版主体升级
.XX ±0.25	.XX°	FINISH SEE NOTE	PART NO.: MUYF-05*T-4BHUA684
.XXX ±0.15	.XXX°	Q'TY	DR: Ricky 2018/5/2
			CHKD: Ricky 2018/5/2
			APPD:

THESE DRAWINGS AND SPECIFICATIONSARE THE PROPERTY OF ACCURATE INNOTECHINC .AND SHALL NOT BE REPRODUCED. COPIED OR USED IN ANY MANNER WITHOUT THE PRIOR WRITTEN CONSENT OF ACCURATE INNOTECH INC

DWG NO.: AII-HUA684

SCALE	SHEET	REV.	CUSTOMER DRAWING
5:1	1/1	A	

龙创中业 开关 插座 连接器 LCZY SWITCH