REV.	ECN. NO.	APPD.

Pb Process Capable

RoHS Compliant 2002/95/EC

Halogen Free

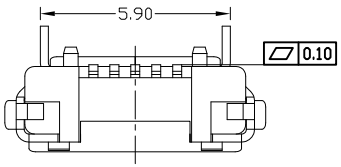

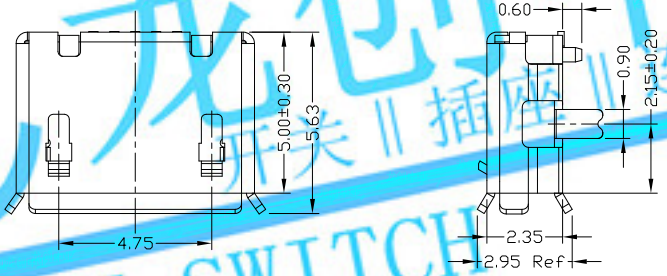

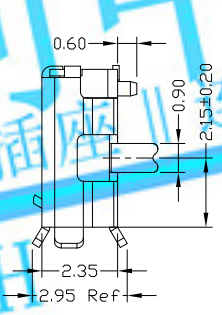

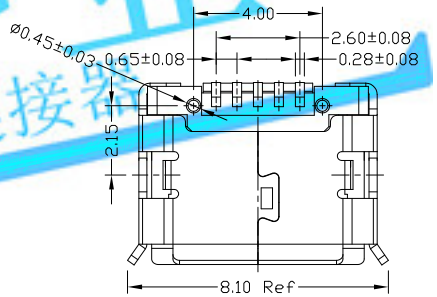

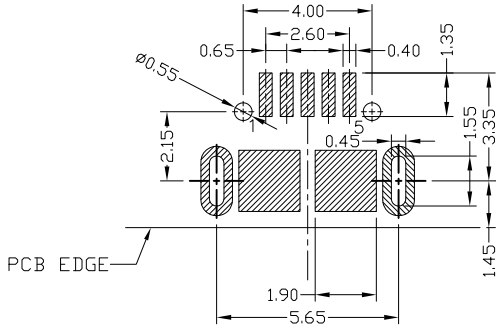

RECOMMENDED PCB LAYOUT

龙创中业
开关 || 插座 || 连接器
LCZY SWITCH

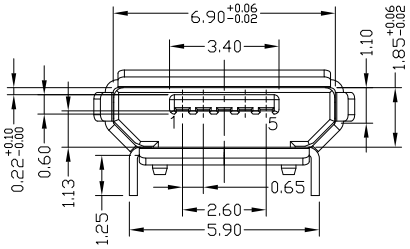

NOTES:

1.ELECTRICAL:

1)VOLTAGE CURRENT RATING:PIN1&5 1.8AMP MAX / PIN2&3&4 1AMP MAX. ,30V AC;

2)INSULATION RESISTANCE: 100MΩ MIN;

3)CONTACT RESISTANCE: 30mΩ MAX;

4)WITHSTANDING VOLTAGE: 100V AC; FOR 1 MIN.

5)OPERATING TEMPERATURE:-30°C TO +80°C.

2.Mechanical:

1)Mating Force: 35N MAX

2)Unmating Force: 10N MIN.

3.DIMENSIONS MARKED " ▼ " TO BE CHECKED BY Q.C & IPQC.

4.PART NO.

MUYF-05*T-4BHUA039

1:Au 1U"
6:Au 30U"

T:TIN
N:NICKEL

W:WHITE
B:BLACK

1:PBT
2:PA6T
3:PA9T
4:LCP

Bill of materials:

NO	PARTS	MATERIAL	QTY	FINISHING
3	SHELL	COPPER ALLOY	1	PLATED TIN
2	HOUSING	LCP+30%GF	1	UL94V-0
1	TERMINAL	COPPER ALLOY	5	PLATED GOLD

X. ±0.35	X.° ±2°	UNITS mm	LONGCHUANG ZHONGYE (HK)CO.,LIMITED
.X ±0.30	.X° ±1°	MAT'L SEE NOTE	
.XX ±0.25	.XX°	FINISH SEE NOTE	
.XXX ±0.15	.XXX°	Q'TY	

THESE DRAWINGS AND SPECIFICATIONSARE THE PROPERTY OF ACCURATE INNOTECHINC .AND SHALL NOT BE REPRODUCED. COPIED OR USED IN ANY MANNER WITHOUT THE PRIOR WRITTEN CONSENT OF ACCURATE INNOTECH INC

TITLE: MICRO USB B TYPE F 5P 插板5.9脚长1.25有柱	PART NO.: MUYF-05*T-4BHUA039
DR: Ricky 2018/5/14	DWG NO.: AII-HUA039
CHKD: Ricky 2018/5/14	SCALE 5:1 / SHEET 1/1 / REV. A / CUSTOMER DRAWING
APPD:	