REV.	ECN. NO.	APPD.

Pb Process Capable

RoHS Compliant 2002/95/EC

Halogen Free

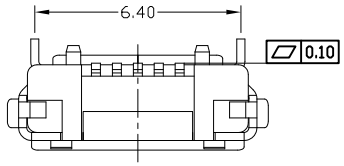

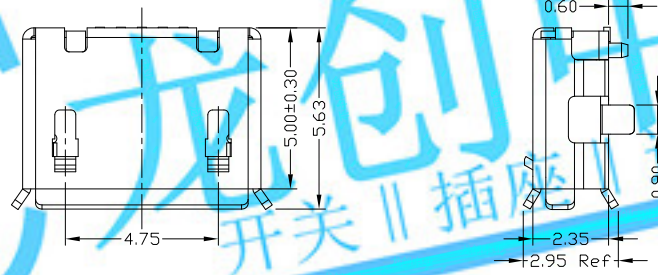

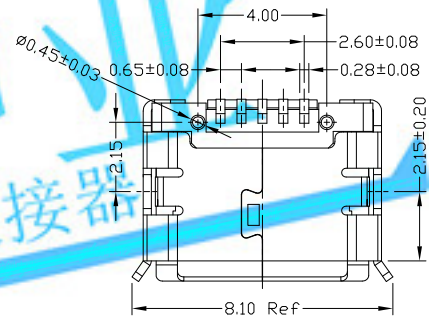

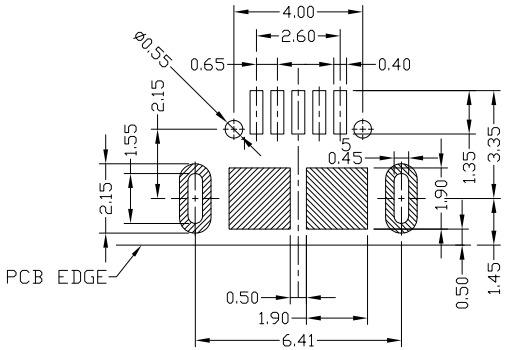

RECOMMENDED PCB LAYOUT

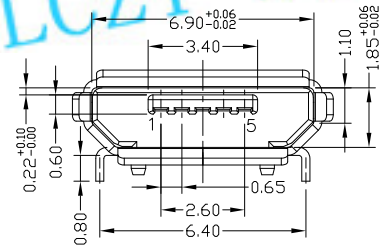

NOTES:

1.ELECTRICAL:

1)VOLTAGE CURRENT RATING:PIN1&5 1.8AMP MAX / PIN2&3&4 1AMP MAX. ,30V AC;

2)INSULATION RESISTANCE: 100MΩ MIN;

3)CONTACT RESISTANCE: 30mΩ MAX;

4)WITHSTANDING VOLTAGE: 100V AC; FOR 1 MIN.

5)OPERATING TEMPERATURE:-30°C TO +80°C.

2.Mechanical:

1)Mating Force: 35N MAX

2)Unmating Force: 10N MIN.

3.DIMENSIONS MARKED " ▼ " TO BE CHECKED BY Q.C & IPQC.

4.PART NO.

MUYF-05*T-4BHUA030

1:Au 1U"
6:Au 30U"

T:TIN
N:NICKEL

W:WHITE
B:BLACK

1:PBT
2:PA6T
3:PA9T
4:LCP

Bill of materials:

NO	PARTS	MATERIAL	QTY	FINISHING
3	SHELL	COPPER ALLOY	1	PLATED TIN
2	HOUSING	LCP+30%GF	1	UL94V-0
1	TERMINAL	COPPER ALLOY	5	PLATED GOLD

X. ±0.35	X.° ±2°	UNITS mm	LONGCHUANG ZHONGYE (HK)CO.,LIMITED
.X ±0.30	.X° ±1°	MAT'L SEE NOTE	TITLE: MICRO USB B TYPE F 5P 插板6.4 有脚柱 / PART NO.: MUYF-05*T-4BHUA030
.XX ±0.25	.XX°	FINISH SEE NOTE	DR: Ricky 2018/5/15 / DWG NO.: AII-HUA030
.XXX ±0.15	.XXX°	Q'TY	CHKD: Ricky 2018/5/15
			APPD:

THESE DRAWINGS AND SPECIFICATIONSARE THE PROPERTY OF ACCURATE INNOTECHINC .AND SHALL NOT BE REPRODUCED. COPIED OR USED IN ANY MANNER WITHOUT THE PRIOR WRITTEN CONSENT OF ACCURATE INNOTECH INC

SCALE	SHEET	REV.	
5:1	1/1	A	CUSTOMER DRAWING

龙创中业 开关 || 插座 || 连接器 LCZY SWITCH