REV.	ECN. NO.	APPD.

Pb Process Capable

RoHS Compliant 2002/95/EC

Halogen Free

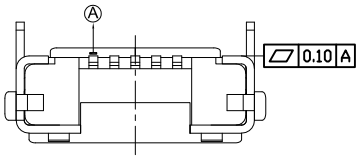

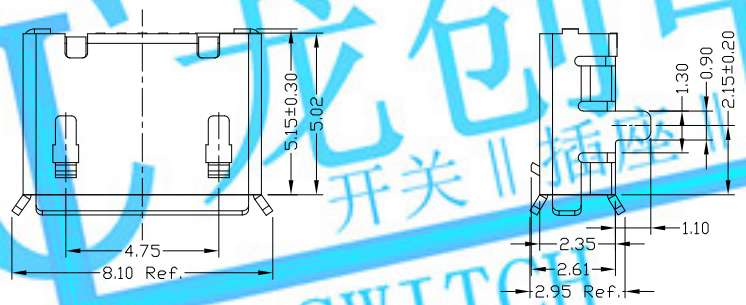

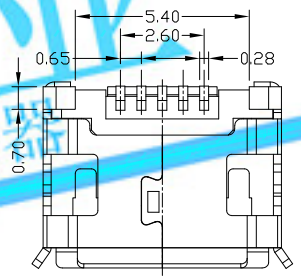

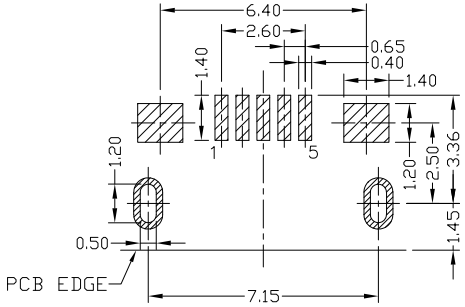

RECOMMENDED PCB LAYOUT

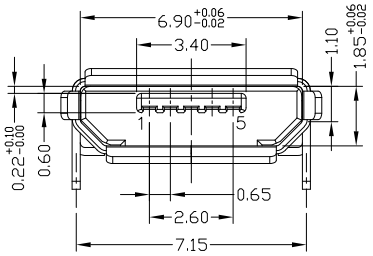

NOTES:

1. ELECTRICAL:
   1) VOLTAGE CURRENT RATING:PIN1&5 1.8AMP MAX / PIN2&3&4 1AMP MAX. ,30V AC;
   2) INSULATION RESISTANCE: 100MΩ MIN;
   3) CONTACT RESISTANCE: 30mΩ MAX;
   4) WITHSTANDING VOLTAGE: 100V AC; FOR 1 MIN.
   5) OPERATING TEMPERATURE:-30°C TO +80°C.
2. Mechanical:
   1) Mating Force: 35N MAX
   2) Unmating Force: 10N MIN.
3. DIMENSIONS MARKED "▼" TO BE CHECKED BY Q.C & IPQC.

4.PART NO.

MUYF-05*T-4BHUA322

- 1:Au 1U"
- 6:Au 30U"
- T:TIN
- N:NICKEL
- W:WHITE
- B:BLACK
- 1:PBT
- 2:PA6T
- 3:PA9T
- 4:LCP

Bill of materials:

NO	PARTS	MATERIAL	QTY	FINISHING
3	SHELL	STAINLESS STEEL	1	PLATED TIN
2	HOUSING	LCP+30%GF	1	UL94V-0
1	TERMINAL	COPPER ALLOY	5	PLATED GOLD

X. ±0.35	X.° ±2°
.X ±0.30	.X° ±1°
.XX ±0.25	.XX°
.XXX ±0.15	.XXX°

THESE DRAWINGS AND SPECIFICATIONSARE THE PROPERTY OF ACCURATE INNOTECHINC .AND SHALL NOT BE REPRODUCED. COPIED OR USED IN ANY MANNER WITHOUT THE PRIOR WRITTEN CONSENT OF ACCURATE INNOTECH INC

UNITS mm

MAT'L SEE NOTE

FINISH SEE NOTE

Q'TY

LONGCHUANG ZHONGYE (HK)CO.,LIMITED

TITLE: MICRO USB B TYPE F 5P 插板7.2 有导位无柱 外壳加焊盘脚长1.1

PART NO.: MUYF-05XT-4BHUA322

DR: Ricky 2018/9/13

CHKD: Ricky 2018/9/13

APPD:

DWG NO.: AII-HUA322

SCALE	SHEET	REV.	
5:1	1/1	A	CUSTOMER DRAWING

龙创中业 开关 插座 连接器 LCZY SWITCH