REV.	ECN. NO.	APPD.

Process Capable

RoHS Compliant 2002/95/EC

Halogen Free

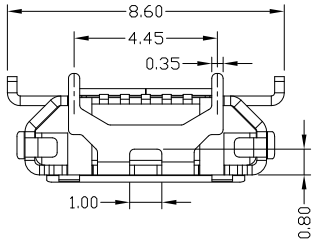

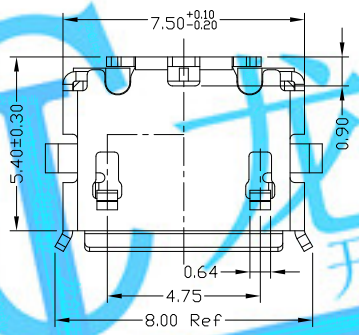

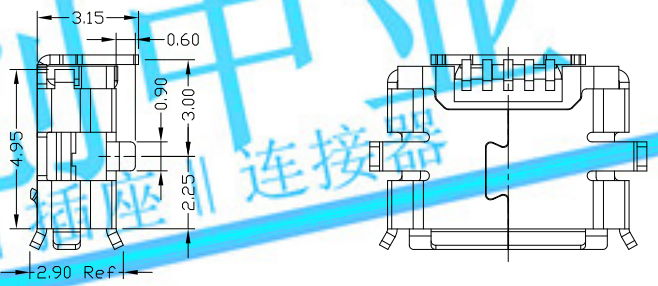

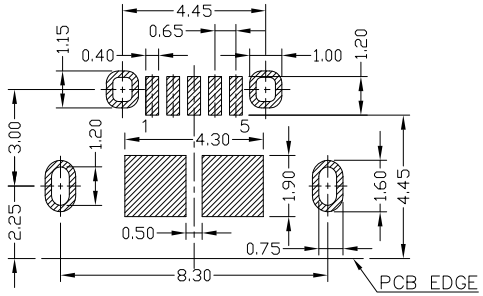

RECOMMENDED PCB LAYOUT

龙创中业
开关 | 插座 | 连接器
LCZY SWITCH

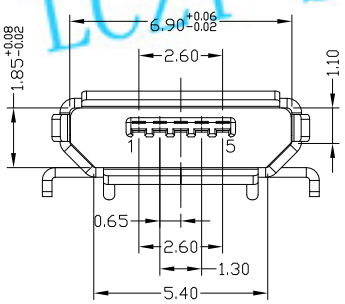

NOTES:

1. ELECTRICAL:
   1) VOLTAGE CURRENT RATING:PIN1&5 1.8AMP MAX / PIN2&3&4 1AMP MAX. ,30V AC;
   2) INSULATION RESISTANCE: 100MΩ MIN;
   3) CONTACT RESISTANCE: 30mΩ MAX;
   4) WITHSTANDING VOLTAGE: 100V AC; FOR 1 MIN.
   5) OPERATING TEMPERATURE:-30°C TO +80°C.
2. Mechanical:
   1) Mating Force: 35N MAX
   2) Unmating Force: 10N MIN.
3. DIMENSIONS MARKED "▼" TO BE CHECKED BY Q.C & IPQC.

4.PART NO.

MUYF-05*T-4BHUA343

- 1:Au 1U"
- 6:Au 30U"
- T:TIN
- N:NICKEL
- W:WHITE
- B:BLACK
- 1:PBT
- 2:PA6T
- 3:PA9T
- 4:LCP

Bill of materials:

NO	PARTS	MATERIAL	QTY	FINISHING
3	SHELL	COPPER ALLOY	1	PLATED TIN
2	HOUSING	LCP+30%GF	1	UL94V-0
1	TERMINAL	COPPER ALLOY	5	PLATED GOLD

X. ±0.35	X.° ±2°	UNITS	mm
.X ±0.30	.X° ±1°	MAT'L	SEE NOTE
.XX ±0.25	.XX°	FINISH	SEE NOTE
.XXX ±0.15	.XXX°	Q'TY	

THESE DRAWINGS AND SPECIFICATIONSARE THE PROPERTY OF ACCURATE INNOTECHINC .AND SHALL NOT BE REPRODUCED. COPIED OR USED IN ANY MANNER WITHOUT THE PRIOR WRITTEN CONSENT OF ACCURATE INNOTECH INC

LONGCHUANG ZHONGYE (HK)CO.,LIMITED

TITLE: MICRO USB B TYPE F 5P 牛角型全插4.45 8.6无柱		PART NO.: MUYF-05XT-4BHUA343	
DR: Ricky 2018/9/5		DWG NO.: AII-HUA343	
CHKD: Ricky 2018/9/5		SCALE 5:1	SHEET 1/1	REV. A	CUSTOMER DRAWING
APPD:			