Pb Process Capable

RoHS Compliant 2002/95/EC

REV.	ECN. NO.	APPD.

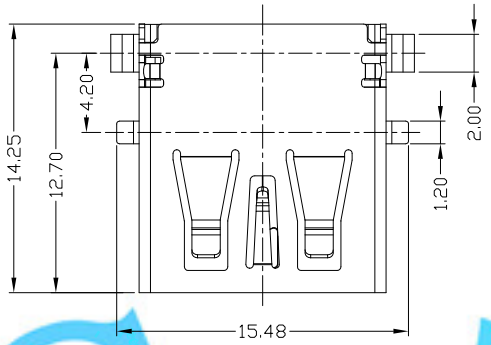

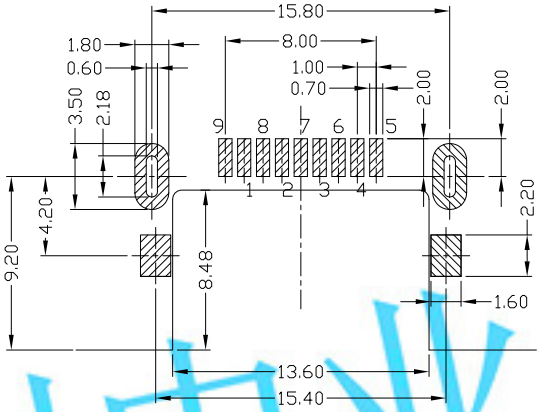

RECOMMENDED PCB LAYOUT

Pin #	SIGNAL NAME	DESCRIPTION	MATING SEQUENCE
1	VBUS	POWER	SECOND
2	D-	USB 2.0 DIFFERENTIAL PAIR	THIRD
3	D+		
4	GND	GROUND FOR POWER RETURN	SECOND
5	STDA_SSRX-	SUPERSPEED RECEIVER DIFFERENTIAL PAIR	LAST
6	STDA_SSRX+		
7	GND_DRAIN	GROUND FOR SIGNAL RETURN	
8	STDA_SSTX-	SUPERSPEED TRANSMITTER DIFFERENTIAL PAIR	
9	STDA_SSTX+		
Shell	Shield	CONNECTOR METAL SHELL	FRIST

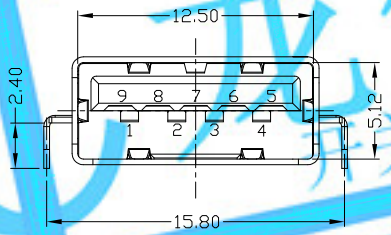

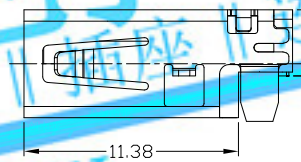

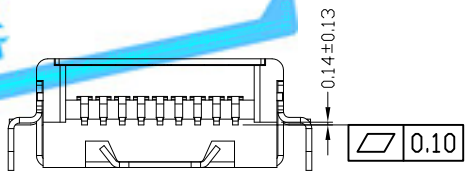

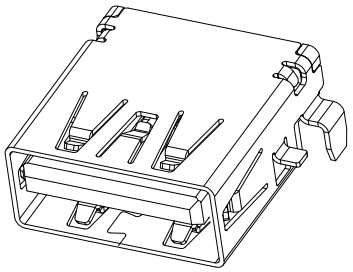

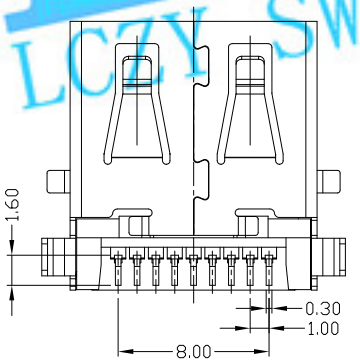

NOTES:

1. ELECTRICAL:
   1) CURRENT RATING:1.5AMP;
   2) INSULATION RESISTANCE: 100MΩ MIN;
   3) CONTACT RESISTANCE: 30mΩ MAX;
   4) WITHSTANDING VOLTAGE: 100V AC;
   5) OPERATING TEMPERATURE:-25°C ~ +85°C.
2. Mechanical:
   1) Mating Force: 35N MAX
   2) Unmating Force: 10N MIN.
3. DIMENSIONS MARKED "▼" TO BE CHECKED BY Q.C & IPQC.
4. PART NO.

USAF-09✱N-4BLVC13

- 1:Au 1U"
- 5:Au 15U"
- 6:Au 30U"
- W:WHITE
- B:BLACK
- BL:BLUE
- 1:PBT
- 2:PA6T
- 3:PA9T
- 4:LCP

Bill of materials:

NO	PARTS	MATERIAL	QTY	FINISHING
3	SHELL	COPPER ALLOY	1	PLATED NICKEL
2	TERMINAL	COPPER ALLOY	9	PLATED GOLD/TIN
1	HOUSING	LCP+30%GF	1	UL94V-0

X. ±0.35	X.° ±2°	UNITS mm	
.X ±0.3	.X° ±1°	MAT'L SEE NOTE	
.XX ±0.25	.XX°		
.XXX ±0.15	.XXX°	FINISH SEE NOTE	
		Q'TY	

THESE DRAWINGS AND SPECIFICATIONS ARE THE PROPERTY OF ACCURATE INNOTECH INC AND SHALL NOT BE REPRODUCED, COPIED OR USED IN ANY MANNER WITHOUT THE PRIOR WRITTEN CONSENT OF ACCURATE INNOTECH INC.

LONGCHUANG ZHONGYE (HK)CO.,LIMITED

TITLE: USB 3.0 AF 沉板 SMT 无卷边方脚	PART NO.: USAF-09✱N-4BLVC13
DR: gan 2016/12/3	DWG NO.: AII-VC13
CHKD: gan 2016/12/3	SCALE 1:1 / SHEET 1/1 / REV. B / CUSTOMER DRAWING
APPD:	

龙创电业 开关 插座 连接器 LCZY SWITCH