REV	LTR	DESCRIPTION	DATE	REVISER	APPD

Pb Process Capable

RoHS Compliant 2002/95/EC

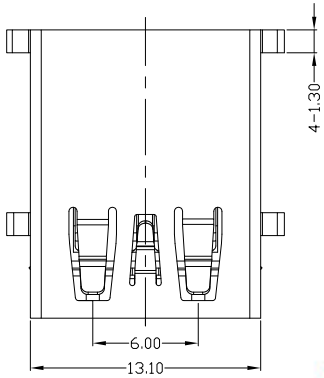

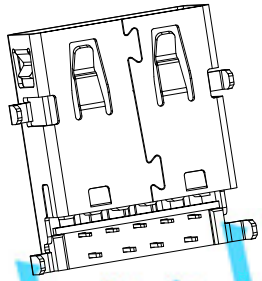

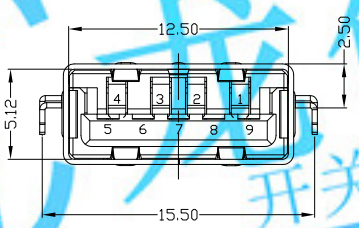

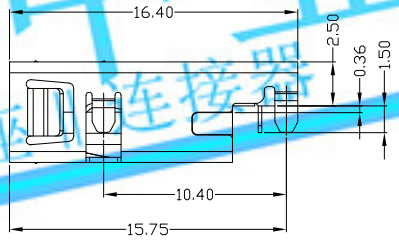

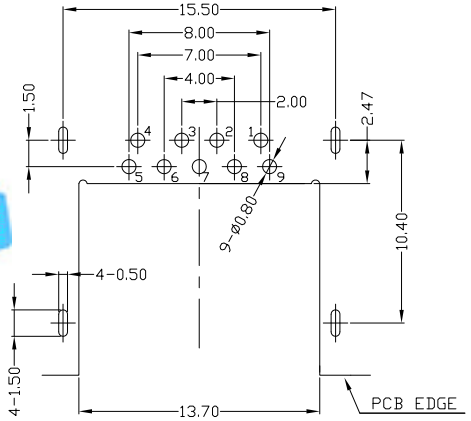

RECOMMENDED PCB LAYOUT

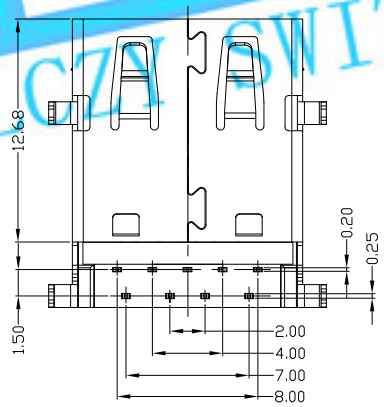

NOTES:

1. ELECTRICAL:
   1) VOLTAGE CURRENT RATING:1.5AMP,30V AC;
   2) INSULATION RESISTANCE: 100MΩ MIN;
   3) CONTACT RESISTANCE: 50mΩ MAX;
   4) WITHSTANDING VOLTAGE: 100V AC;
   5) OPERATING TEMPERATURE:-40°C TO +85°C.
2. Mechanical:
   1) Mating Force: 35N MAX
   2) Unmating Force: 10N MIN.
3. NOTE:1.DIMENSIONS MARKED "▼" TO BE CHECKED BY Q.C & IPQC.

4.PART NO.

USAF-09*N-4BRS14

W:WHITE
B:BLACK
BL:BLUE

1:Au 1U"
5:Au 15U"
6:Au 30U"

1:PBT
2:PA6T
3:PA9T
4:LCP

Bill of materials:

NO	PARTS	MATERIAL	QTY	FINISHING
4	HOUSING	LCP+30%GF	1	UL94V-0
3	SHELL	COPPER ALLOY	1	PLATED NICKEL
2	TERMINAL1	COPPER ALLOY	4	PLATED GOLD/TIN
1	TERMINAL2	COPPER ALLOY	5	PLATED GOLD/TIN

X. ±0.35	X.° ±2°
.X ±0.3	.X° ±1°
.XX ±0.25	.XX°
.XXX ±0.15	.XXX°

UNITS mm

MAT'L SEE NOTE

FINISH SEE NOTE

Q'TY

THESE DRAWINGS AND SPECIFICATIONS ARE THE PROPERTY OF ACCURATE INNOTECH INC
AND SHALL NOT BE REPRODUCED, COPIED OR USED IN ANY MANNER WITHOUT THE PRIOR WRITTEN CONSENT OF ACCURATE INNOTECH INC

LONGCHUANG ZHONGYE (HK)CO.,LIMITED

TITLE: USB 3.0 AF DIP 90度 H2.5 无卷边 反向

PART NO.: USAF-09*N-4BRS14

DR: gan 2014/9/19

CHKD: gan 2014/9/19

APPD:

DWG NO.: AII-RS14

SCALE	SHEET	REV.	
1:1	1/1	B	CUSTOMER DRAWING

龙创中业 开关 || 插座 || 连接器 LCZY SWITCH