REV	LTR	DESCRIPTION	DATE	REVISER	APPD

Pb Process Capable

RoHS Compliant 2002/95/EC

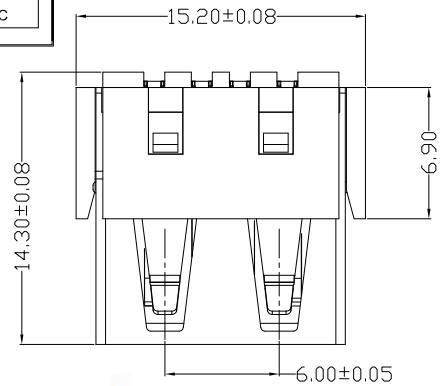

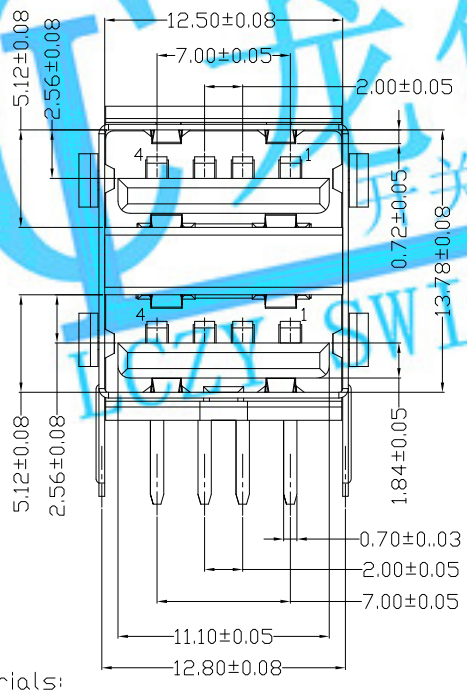

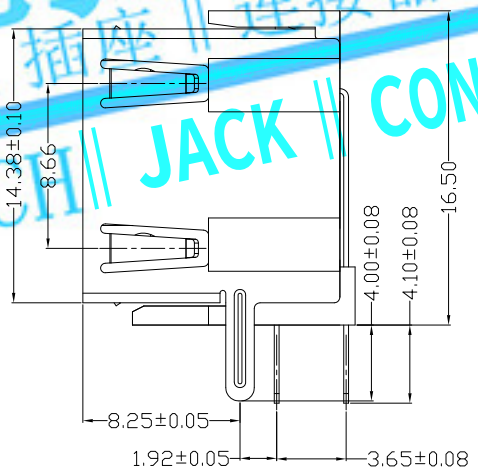

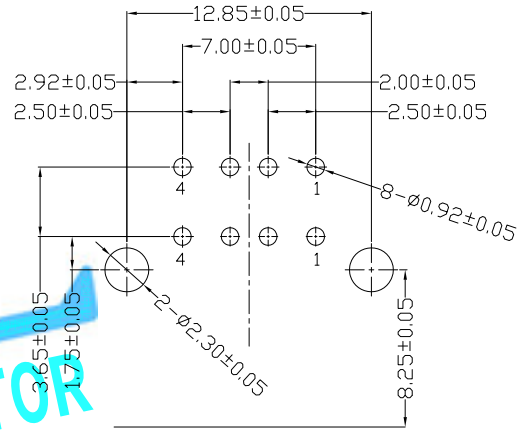

RECOMMENDED PCB LAYOUT

NOTES:

1.ELECTRICAL:
- 1)VOLTAGE CURRENT RATING:2AMP,30V DC;
- 2)INSULATION RESISTANCE: 1000MΩ MIN;
- 3)CONTACT RESISTANCE: 30mΩ MAX;
- 4)WITHSTANDING VOLTAGE: 500V AC FOR 1MIN;
- 5)OPERATING TEMPERATURE:-30°C TO +85°C.

2.Mechanical:
- 1)Mating Force: 35N MAX
- 2)Unmating Force: 10N MIN.

3.DIMENSIONS MARKED " ▼ " TO BE CHECKED BY Q.C & IPQC

4. PART NO.

USAF-08*N-1*RJ51

- 1:Au 1U" / 6:Au 30U"
- W:WHITE / B:BLACK
- 1:PBT / 2:PA6T / 3:PA9T / 4:LCP

Bill of materials:

NO	PARTS	MATERIAL	QTY	FINISHING
5				
4				
3	HOUSING	PBT+30%GF	1	UL94V-0
2	SHELL	COPPER ALLOY / SPCC	1	PLATED NICKEL
1	TERMINAL	COPPER ALLOY	4	PLATED GOLD/TIN

X.	±0.15	X.°	±5°
.X	±0.10	.X°	±2°
.XX	±0.05	.XX°	±1°
.XXX	±0.03	.XXX°	±0.5°

UNITS mm

MAT'L SEE NOTE

FINISH SEE NOTE

Q'TY

THESE DRAWINGS AND SPECIFICATIONS ARE THE PROPERTY OF ACCURATE INNOTECH INC ,AND SHALL NOT BE REPRODUCED. COPIED OR USED IN ANY MANNER WITHOUT THE PRIOR WRITTEN CONSENT OF ACCURATE INNOTECH INC

LONGCHUANG ZHONGYE (HK)CO.,LIMITED

TITLE: USB AF 双层短体90度 反向平口

PART NO.: USAF-08XN-1XRJ51

DR: Ricky 2019/08/21

CHKD: Ricky 2019/08/21

APPD:

DWG NO.: AII-RJ51

SCALE	SHEET	REV.	CUSTOMER DRAWING
1:1	1/1	B	

龙创中业 开关 || 插座 || 连接器 LCZY SWITCH || JACK || CONNECTOR