REV	LTR	DESCRIPTION	DATE	REVISER	APPD

Pb Process Capable

RoHS Compliant 2002/95/EC

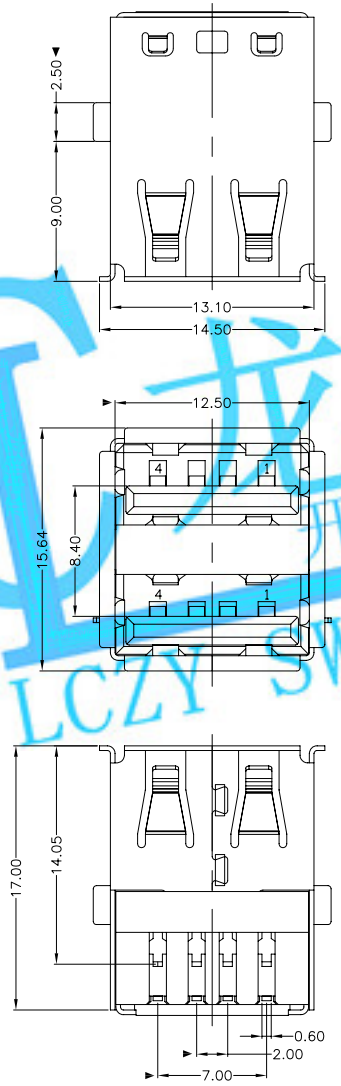

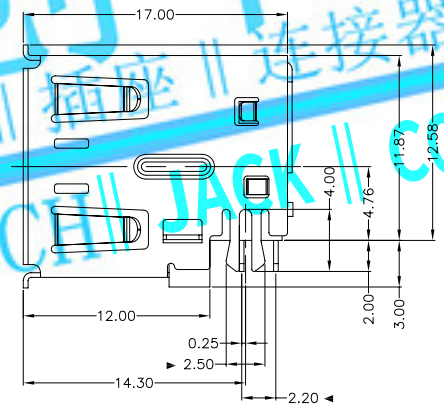

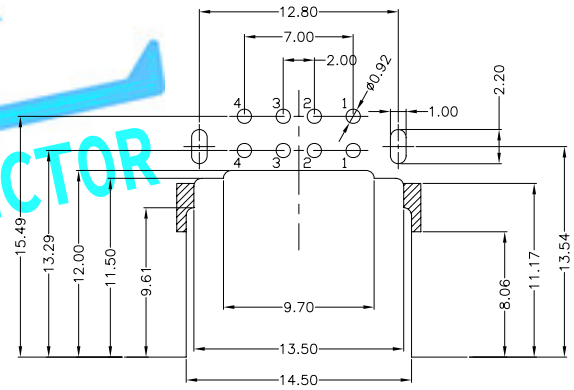

RECOMMENDED PCB LAYOUT

龙创中业
开关 || 插座 || 连接器
LCZY SWITCH || JACK || CONNECTOR

NOTES:

1. ELECTRICAL:
   1) VOLTAGE CURRENT RATING:1.0AMP,30V AC;
   2) INSULATION RESISTANCE: 1000MΩ MIN;
   3) CONTACT RESISTANCE: 30mΩ MAX;
   4) WITHSTANDING VOLTAGE: 500V AC;
   5) OPERATING TEMPERATURE:-55°C TO +105°C.
2. Mechanical:
   1) Mating Force: 35N MAX
   2) Unmating Force: 10N MIN.
3. NOTE:1.DIMENSIONS MARKED "▼" TO BE CHECKED BY Q.C & IPQC.
4. PART NO.

USAF-08XN-1XR32

1:Au 1U"
5:Au 15U"
6:Au 30U"

W:WHITE
B:BLACK

1:PBT
2:PA6T
3:PA9T
4:LCP

Bill of materials:

NO	PARTS	MATERIAL	QTY	FINISHING
6	CLIP	STAINLESS STEEL	1	PLATED NICKEL
5	BOTTOM PLUG	PBT/LCP+30%GF	1	UL94V-0
4	BACK SHELL	SPCC	1	PLATED NICKEL
3	SHELL	COPPER ALLOY	1	PLATED NICKEL
2	HOUSING	PBT/LCP+30%GF	1	UL94V-0
1	TERMINAL	COPPER ALLOY	8	PLATED GOLD/TIN

X. ±0.35	X.° ±2°
.X ±0.3	.X° ±1°
.XX ±0.25	.XX°
.XXX ±0.15	.XXX°

UNITS mm

MAT'L SEE NOTE

FINISH SEE NOTE

Q'TY

THESE DRAWINGS AND SPECIFICATIONS ARE THE PROPERTY OF ACCURATE INNOTECH INC AND SHALL NOT BE REPRODUCED, COPIED OR USED IN ANY MANNER WITHOUT THE PRIOR WRITTEN CONSENT OF ACCURATE INNOTECH INC

TITLE: USB AF 90° 双层沉板反向

DR: gan 2014/1/12

CHKD: gan 2014/1/12

APPD:

PART NO.: USAF-08XN-1XR32

DWG NO.: AII-R32

SCALE	SHEET	REV.	
1:1	1/1	B	CUSTOMER DRAWING