REV	LTR	DESCRIPTION	DATE	REVISER	APPD

Pb Process Capable

RoHS Compliant 2002/95/EC

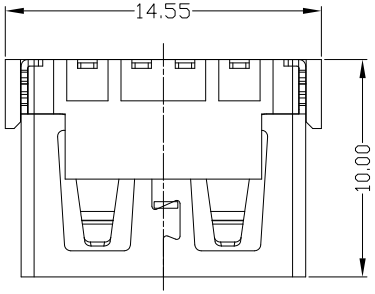

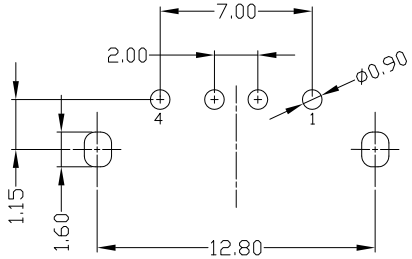

RECOMMENDED PCB LAYOUT

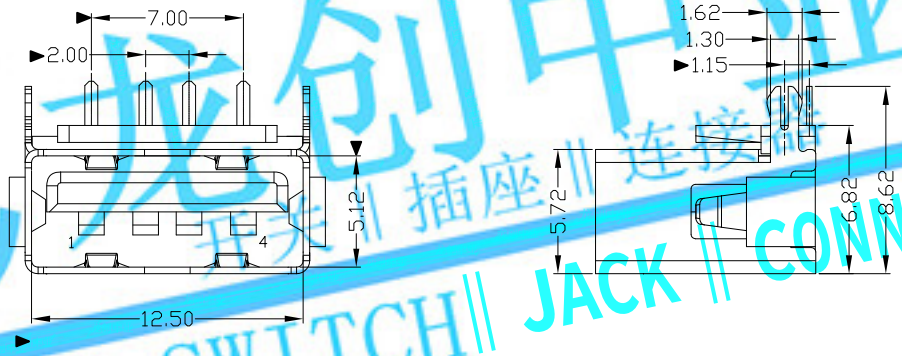

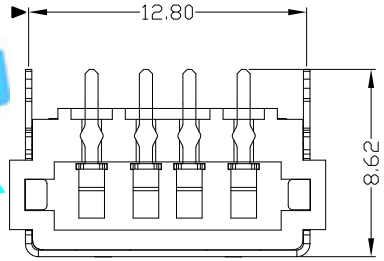

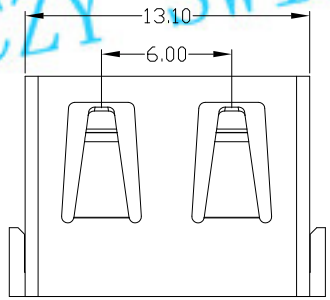

龙创中业
开关 插座 连接器
LCZY SWITCH JACK CONNECTOR

NOTES:

1. ELECTRICAL:
   1) VOLTAGE CURRENT RATING:2AMP,30V AC;
   2) INSULATION RESISTANCE: 1000MΩ MIN;
   3) CONTACT RESISTANCE: 30mΩ MAX;
   4) WITHSTANDING VOLTAGE: 500V AC;
   5) OPERATING TEMPERATURE:-55°C TO +85°C.
2. Mechanical:
   1) Mating Force: 35N MAX
   2) Unmating Force: 10N MIN.
3. NOTE:1.DIMENSIONS MARKED "▼" TO BE CHECKED BY Q.C & IPQC.

4.PART NO.

USAF-04✱N-1✱RU01

- 1:Au 1U"
- 6:Au 30U"
- W:WHITE
- B:BLACK
- 1:PBT
- 2:PA6T
- 3:PA9T
- 4:LCP

Bill of materials:

NO	PARTS	MATERIAL	QTY	FINISHING
3	HOUSING	PBT	1	UL94V-0
2	SHELL	COPPER ALLOY	1	PLATED NICKEL
1	TERMINAL	COPPER ALLOY	4	PLATED GOLD/TIN

X. ±0.35	X.° ±2°	UNITS mm	LONGCHUANG ZHONGYE (HK)CO.,LIMITED
.X ±0.3	.X° ±1°	MAT'L SEE NOTE	
.XX ±0.25	.XX°		
.XXX ±0.15	.XXX°	FINISH SEE NOTE	
		Q'TY	

THESE DRAWINGS AND SPECIFICATIONS ARE THE PROPERTY OF ACCURATE INNOTECH INC .AND SHALL NOT BE REPRODUCED. COPIED OR USED IN ANY MANNER WITHOUT THE PRIOR WRITTEN CONSENT OF ACCURATE INNOTECH INC.

TITLE: USB AF 短体反向(两脚) 无卷边		PART NO.: USAF-04✱N-1✱RU01	
DR: gan 2015/7/14		DWG NO.: AII-RU01	
CHKD: gan 2015/7/14			
APPD:		SCALE 1:1	SHEET 1/1	REV. B	CUSTOMER DRAWING