Process Capable

RoHS Compliant 2002/95/EC

REV.	ECN. NO.	APPD.

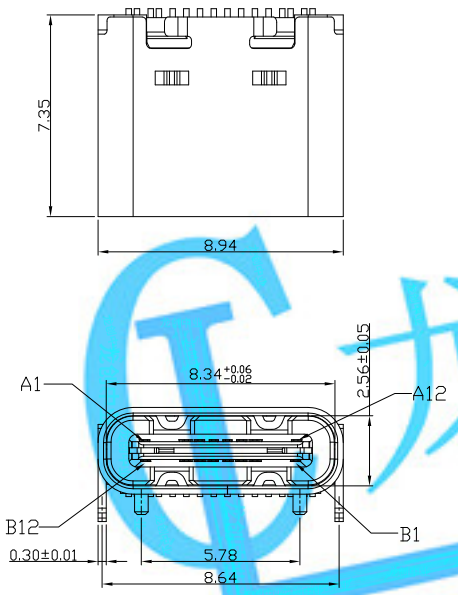

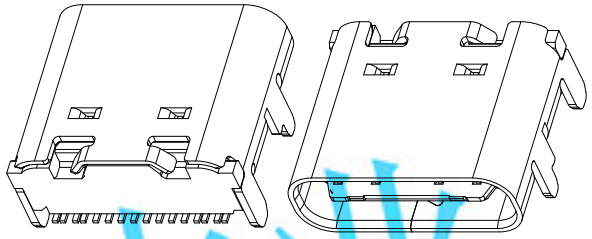

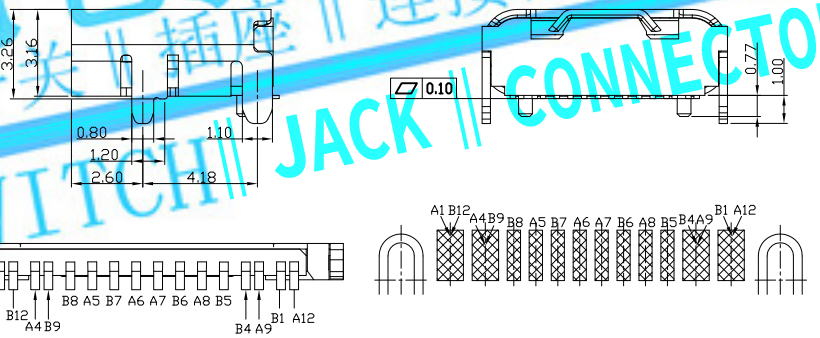

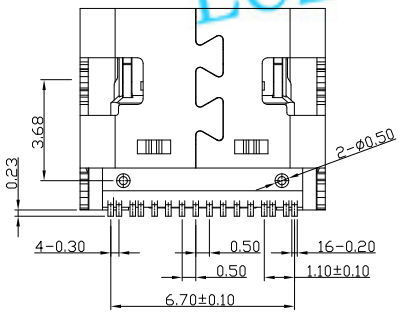

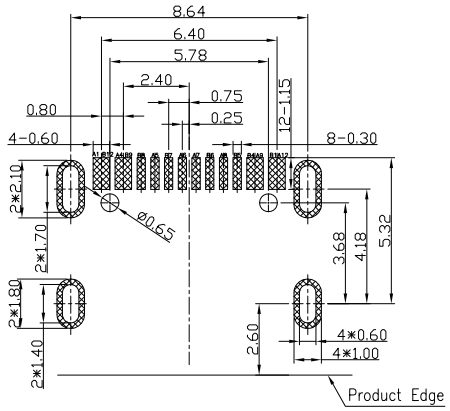

RECOMMENDED P.C.B. LAYOUT(T:1.00mm)
TOLERANCE UNSPECIFIED ±0.05mm

A1	GND	B12	GND
A4	VBUS	B9	VBUS
A5	CC1	B8	SBU2
A6	DP1	B7	DN2
A7	DN1	B6	DP2
A8	SBU1	B5	CC2
A9	VBUS	B4	VBUS
A12	GND	B1	GND
PIN	SIGNAL NAME	PIN	SIGNAL NAME

NOTES:

1.ELECTRICAL:
- 1)CURRENT RATING: 3AMP MAX;
- 2)INSULATION RESISTANCE: 100MΩ MIN; MEASURED BY 500 VDC.
- 3)CONTACT RESISTANCE: 30mΩ MAX;
- 4)WITHSTANDING VOLTAGE: 100V AC; FOR 1 MIN.
- 5)OPERATING TEMPERATURE:-30°C TO +85°C.

2.Mechanical:
- 1)Mating Force: 5N~20N
- 2)Unmating Force: 8N~20N
- 3)Durability: 10,000 cycles

3.DIMENSIONS MARKED "▼" TO BE CHECKED BY Q.C & IPQC.

4.PART NO.

USCF-16*N-4BVD03

- W:WHITE
- B:BLACK

1:Au 1U"
2:Au 3U"
5:Au 15u"
6:Au 30U"

1:PBT
2:PA6T
3:PA9T
4:LCP

NO	PARTS	MATERIAL	QTY	FINISHING
5	SHELL	STAINLESS STEEL	1	PLATED NICKEL
4	SHIELDING PLATE	STAINLESS STEEL	1	
3	MD	LCP+30%GF	1	UL94V-0
2	CONTACT	COPPER ALLOY	16	PLATED GOLD/NICKEL
1	HOUSING	LCP+30%GF	1	UL94V-0

X. ±0.50	X.° ±2°	UNITS mm	LONGCHUANG ZHONGYE (HK)CO.,LIMITED
.X ±0.20	.X° ±1°	MAT'L SEE NOTE	
.XX ±0.10		FINISH SEE NOTE	TITLE: USB TYPE CF 单排贴板16PIN L=7.35 四脚插板 有柱
		Q'TY	DR: Ricky 2019/08/22
			CHKD: Ricky 2019/08/22
			APPD:

PART NO.: USCF-16XN-4BVD03

DWG NO.: AII-VD03

SCALE	SHEET	REV.	CUSTOMER DRAWING
1:1	1/1	B	

THESE DRAWINGS AND SPECIFICATIONS ARE THE PROPERTY OF ACCURATE INNOTECH INC .AND SHALL NOT BE REPRODUCED. COPIED OR USED IN ANY MANNER WITHOUT THE PRIOR WRITTEN CONSENT OF ACCURATE INNOTECH INC

龙创中业 开关 插座 连接器 LCZY SWITCH JACK CONNECTOR