Pb Process Capable

RoHS Compliant 2002/95/EC

REV.	ECN. NO.	APPD.

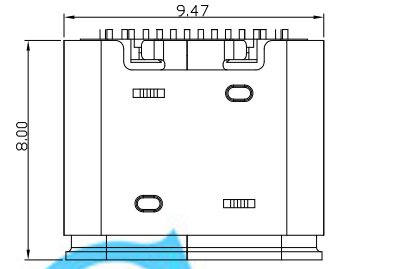

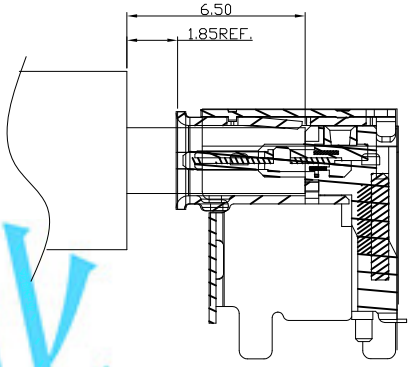

公母对插示图

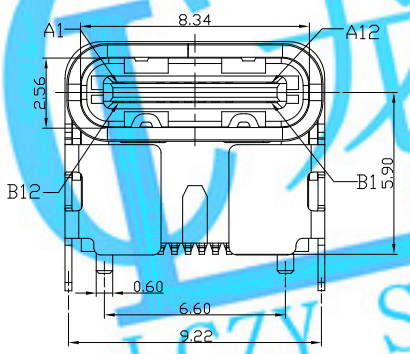

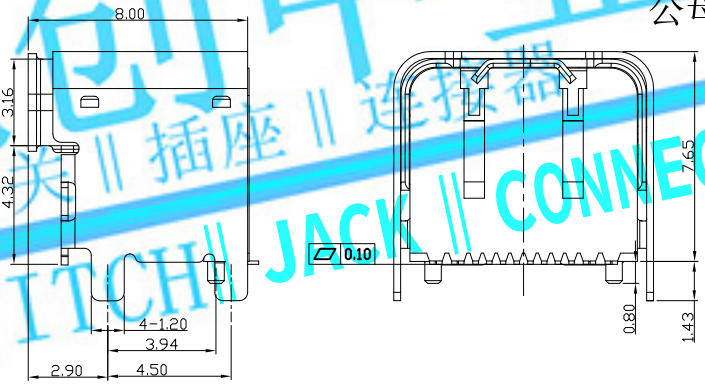

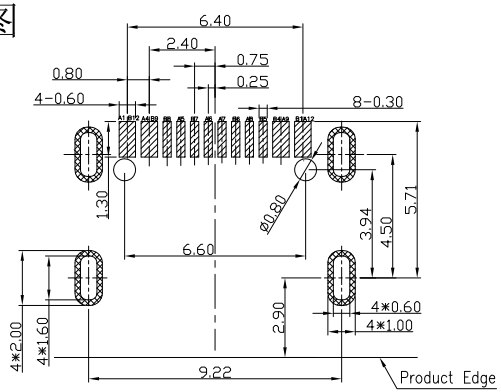

RECOMMENDED P.C.B. LAYOUT
TOLERANCE UNSPECIFIED ±0.05mm

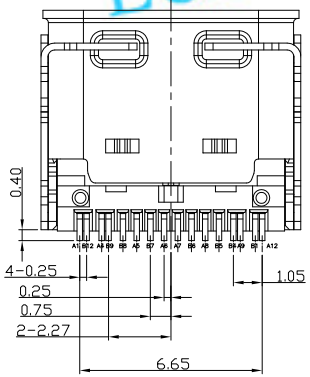

PIN	SIGNAL NAME	PIN	SIGNAL NAME
A1	GND	B12	GND
A4	VBUS	B9	VBUS
A5	CC1	B8	SBU2
A6	DP1	B7	DN2
A7	DN1	B6	DP2
A8	SBU1	B5	CC2
A9	VBUS	B4	VBUS
A12	GND	B1	GND

NOTES:
1. ELECTRICAL:
   1) CURRENT RATING: 5AMP MAX;
   2) INSULATION RESISTANCE: 100MΩ MIN;
   3) CONTACT RESISTANCE: 40mΩ MAX;
   4) WITHSTANDING VOLTAGE: 100V AC;
   5) OPERATING TEMPERATURE:-30°C TO +85°C.
2. Mechanical:
   1) Mating Force: 5N~20N
   2) Unmating Force: 8N~20N
   3) Durability: 10,000 cycles
3. DIMENSIONS MARKED "▼"
   TO BE CHECKED BY Q.C & IPQC.

4.PART NO.

USCF-16*N-4BVS205

W:WHITE
B:BLACK

1:Au 1U"
2:Au 3U"
5:Au 15u"
6:Au 30U"

1:PBT
2:PA6T
3:PA9T
4:LCP

NO	PARTS	MATERIAL	QTY	FINISHING
5	SHELL	STAINLESS STEEL	1	PLATED NICKEL
4	SHIELDING PLATE	STAINLESS STEEL	1	
3	MD	LCP+30%GF	1	UL94V-0
2	CONTACT	COPPER ALLOY	16	PLATED GOLD/NICKEL
1	HOUSING	LCP+30%GF	1	UL94V-0

X. ±0.35	X.° ±2°	UNITS mm	LONGCHUANG ZHONGYE (HK)CO.,LIMITED
.X ±0.30	.X° ±1°	MAT'L SEE NOTE	TITLE: USB C F TYPE 单排SMT 16PIN 垫高4.3脚位4.5
.XX ±0.20	.XX° ±0.5°	FINISH SEE NOTE	PART NO.: USCF-16XN-4BVS205
.XXX ±0.10	.XXX°	Q'TY	DR: Ricky 2017/11/17
			CHKD: Ricky 2017/11/17
			APPD:

THESE DRAWINGS AND SPECIFICATIONS ARE THE PROPERTY OF ACCURATE INNOTECH INC .AND SHALL NOT BE REPRODUCED. COPIED OR USED IN ANY MANNER WITHOUT THE PRIOR WRITTEN CONSENT OF ACCURATE INNOTECH INC

DWG NO.	SCALE	SHEET	REV.	
AII-VS205	1:1	1/1	B	CUSTOMER DRAWING

龙创中业 开关 || 插座 || 连接器 LCZY SWITCH || JACK || CONNECTOR