Pb Process Capable

RoHS Compliant 2002/95/EC

REV.	ECN. NO.	APPD.

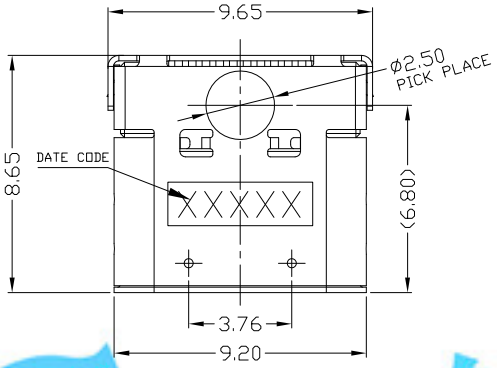

Pin	Signal Name	Mating Sequence	Pin	Signal Name	Mating Sequence
A1	GND	First	B12	GND	First
A2	SSTXp1	Second	B11	SSRXp1	Second
A3	SSTXn1	Second	B10	SSRXn1	Second
A4	VBUS	First	B9	VBUS	First
A5	CC1	Second	B8	SBU2	Second
A6	Dp1	Second	B7	Dn2	Second
A7	Dn1	Second	B6	Dp2	Second
A8	SBU1	Second	B5	CC2	Second
A9	VBUS	First	B4	VBUS	First
A10	SSRXn2	Second	B3	SSTXn2	Second
A11	SSRXp2	Second	B2	SSTXp2	Second
A12	GND	First	B1	GND	First
SHELL		GND	SHELL		GND

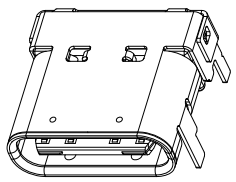

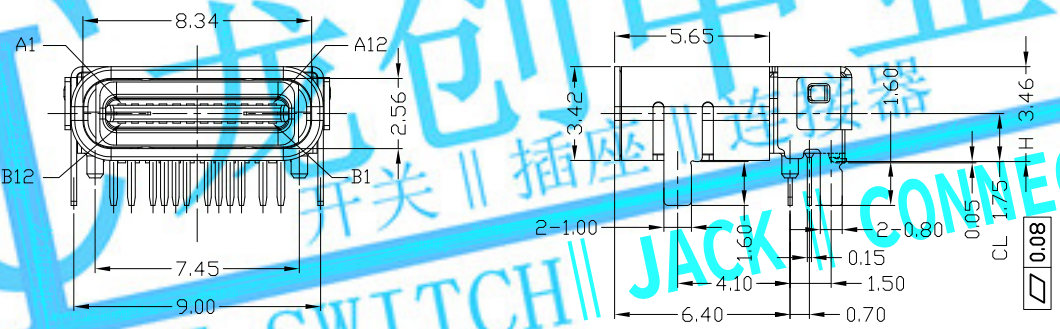

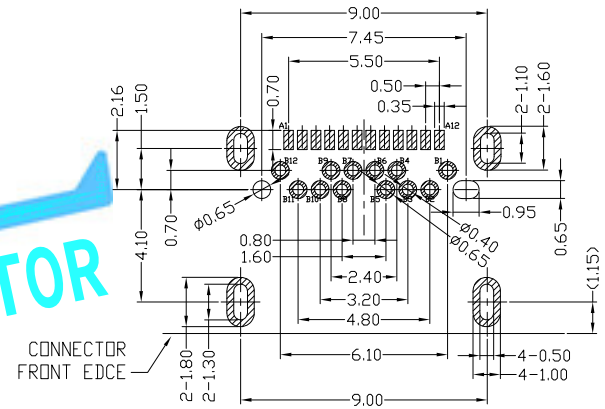

RECOMMENDED PCB LAYOUT

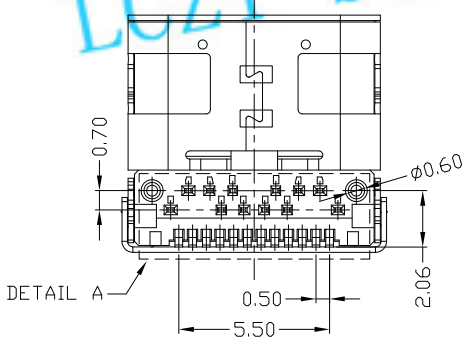

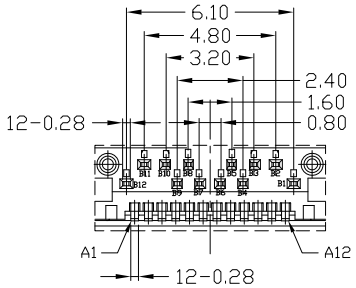

DETAIL A

SCALE 1:1

NOTES:

1. ELECTRICAL:
   1) CURRENT RATING:5A FOR COLLECTIVELY POWER SUPPLY PIN(PINA1,A4,A9,A12,B1,B4,B9,B12); 1.25A FOR VCONN PIN; 0.25A FOR OTHER SIGNAL PIN.
   2) INSULATION RESISTANCE: 100MΩ MIN.
   3) CONTACT RESISTANCE: 40mΩ Max FOR INITIAL. 10mΩ CHANGE AFTER TEST. MEASURE AT 20mV, 100mA;
   4) WITHSTANDING VOLTAGE: 100V AC R.M.S.
   5) OPERATING TEMPERATURE:-40°C ~ +85°C.
2. Mechanical:
   1) MATING FORCE: 5~20N.
   2) UNMATED FORCE: 6~20N AFTER TEST
3. DIMENSIONS MARKED "▼" TO BE CHECKED BY Q.C & IPQC.

4.PART NO.

USCF-24*N-4BVC14

- W:WHITE
- B:BLACK
- 1:Au 1U"
- 2:Au 3U"
- 5:Au 15U"
- 6:Au 30U"
- 1:PBT
- 2:PA6T
- 3:PA9T
- 4:LCP

Bill of materials:

NO	PARTS	MATERIAL	QTY	FINISHING
6	INNER GROUND COVER SHEL	STAINLESS STEEL	1	PLATED NICKEL
5	MID PLATE	STAINLESS STEEL	1	
4	COVER SHELL	COPPER ALLOY	1	PLATED NICKEL
3	SHELL	STAINLESS STEEL	1	PLATED NICKEL
2	TERMINAL	COPPER ALLOY	24	GOLD PLATING ON CONTACT AREA, ALL OVER 50u" Min NICKEL AND 80u"Min Matte Tin ALL OVER 50u" Min NICKEL ON SOLDER AREA
1	HOUSING	LCP+30%GF	1	UL94V-0

X. ±0.35	X.° ±2°	UNITS mm	LONGCHUANG ZHONGYE (HK)CO.,LIMITED
.X ±0.3	.X° ±1°	MAT'L SEE NOTE	TITLE: USB 3.1 C TYPE FEMALE CL1.75 H3.46mm L8.65mm DIP TYPE 焊脚长度1.60mm
.XX ±0.25	.XX°		PART NO.: USCF-24*N-4BVC14
.XXX ±0.15	.XXX°	FINISH SEE NOTE	DR: gan 2016/11/23
		Q'TY	CHKD: gan 2016/11/23
			APPD:

THESE DRAWINGS AND SPECIFICATIONS ARE THE PROPERTY OF ACCURATE INNOTECH INC AND SHALL NOT BE REPRODUCED, COPIED OR USED IN ANY MANNER WITHOUT THE PRIOR WRITTEN CONSENT OF ACCURATE INNOTECH INC.

DWG NO.: AII-VC14

SCALE	SHEET	REV.	CUSTOMER DRAWING
1:1	1/1	B	

龙创中业 开关 插座 连接器 LCZY SWITCH JACK CONNECTOR