Process Capable

RoHS Compliant
2002/95/EC

REV.	ECN. NO.	APPD.

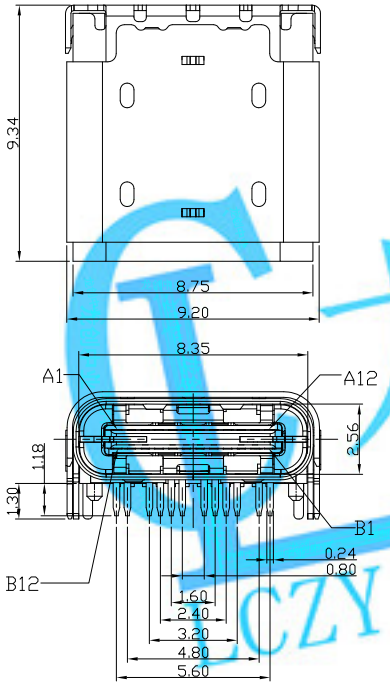

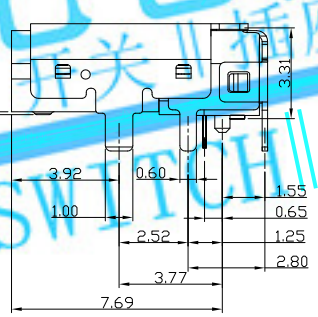

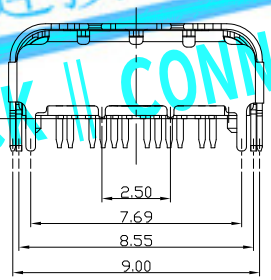

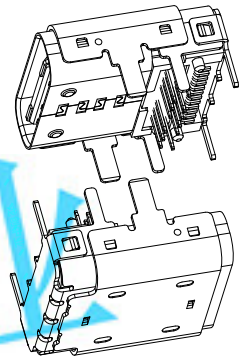

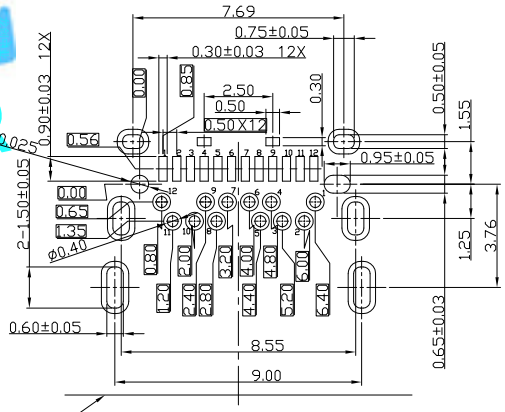

CONNECTOR FRONT EDCE

RECOMMENDED P.C.B. LAYOUT (T:1.00mm)
TOLERANCE UNSPECIFIED ±0.05mm

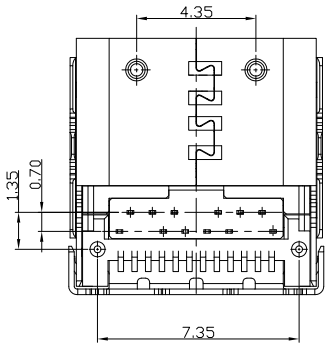

A1	GND	B12	GND
A2	SSTXP1	B11	SSRXP1
A3	SSTXN1	B10	SSRXN1
A4	VBUS	B9	VBUS
A5	CC1	B8	SBU2
A6	DP1	B7	DN2
A7	DN1	B6	DP2
A8	SBU1	B5	CC2
A9	VBUS	B4	VBUS
A10	SSRXN2	B3	SSTXN2
A11	SSRXP2	B2	SSTXP2
A12	GND	B1	GND
PIN	SIGNAL NAME	PIN	SIGNAL NAME

NOTES:
1. ELECTRICAL:
   1) CURRENT RATING: 3AMP MAX;
   2) INSULATION RESISTANCE: 100MΩ MIN;
   3) CONTACT RESISTANCE: 40mΩ MAX;
   4) WITHSTANDING VOLTAGE: 100V AC;
   5) OPERATING TEMPERATURE:-30°C TO +85°C.
2. Mechanical:
   1) Mating Force: 5N~20N
   2) Unmating Force: 8N~20N
   3) Durability: 10,000 cycles
3. DIMENSIONS MARKED "▼"
   TO BE CHECKED BY Q.C & IPQC.

4.PART NO.

USCF-24*N-4BVS28

W:WHITE
B:BLACK

1:Au 1U"
2:Au 3U"
5:Au 15u"
6:Au 30U"

1:PBT
2:PA6T
3:PA9T
4:LCP

NO	PARTS	MATERIAL	QTY	FINISHING
6	TOP SHELL	STAINLESS STEEL	1	PLATED NICKEL
5	SHELL	STAINLESS STEEL	1	PLATED NICKEL
4	SPRING	STAINLESS STEEL	1	
3	SHIELDING PLATE	STAINLESS STEEL	1	PLATED NICKEL
2	CONTACT	COPPER ALLOY	24	PLATED GOLD/NICKEL
1	HOUSING	LCP+30%GF	1	UL94V-0

X. ±0.35	X.° ±2°
.X ±0.30	.X° ±1°
.XX ±0.20	.XX° ±0.5°
.XXX ±0.10	.XXX°

UNITS mm
MAT'L SEE NOTE
FINISH SEE NOTE
Q'TY

THESE DRAWINGS AND SPECIFICATIONS ARE THE PROPERTY OF ACCURATE INNOTECH INC .AND SHALL NOT BE REPRODUCED. COPIED OR USED IN ANY MANNER WITHOUT THE PRIOR WRITTEN CONSENT OF ACCURATE INNOTECH INC

LONGCHUANG ZHONGYE (HK)CO.,LIMITED

TITLE: USB C F TYPE 前插后贴带上盖

PART NO.: USCF-24XN-4BVS28

DR: Ricky 2017/11/13

DWG NO.: AII-VS28

CHKD: Ricky 2017/11/13

APPD:

SCALE	SHEET	REV.	CUSTOMER DRAWING
1:1	1/1	B	

龙创中业 开关 || 插座 || 连接器 LCZY SWITCH || JACK || CONNECTOR