REV.	ECN. NO.	APPD.

Pb Process Capable

RoHS Compliant 2002/95/EC

DIMENSIONS

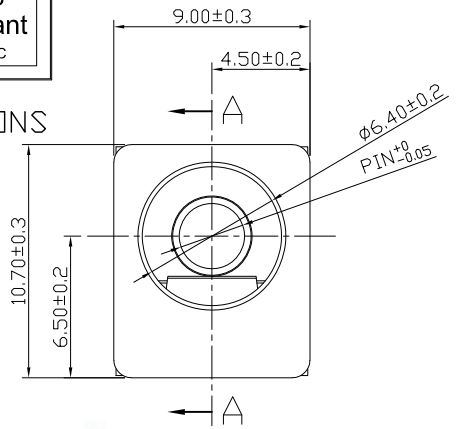

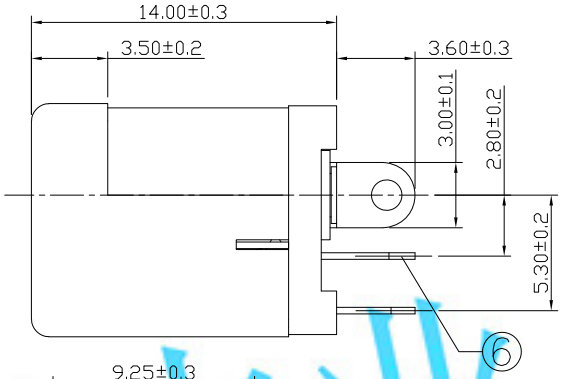

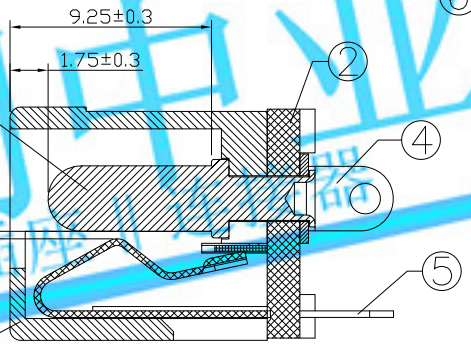

SECTION A-A

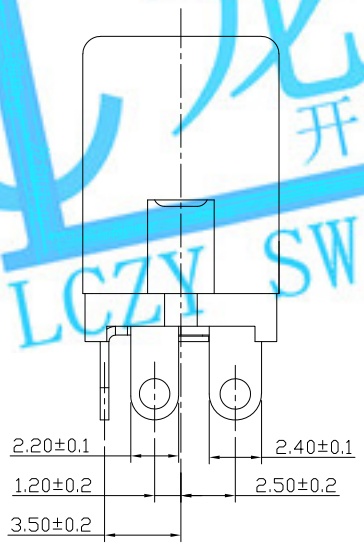

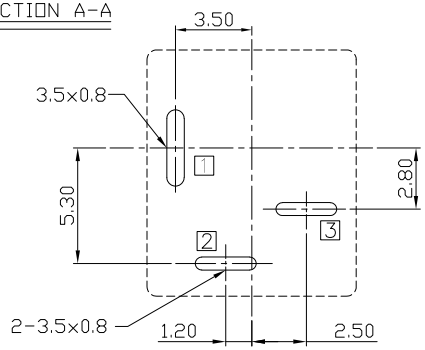

PCB HOLES(TOP VIEW) t=1.6mm

NOTE:GENERAL TOLERANCE:±0.05mm

MODEL CODE:

DCB0-0012D- A □ PB BK T 0 4

(1) (2) (3)(4) (5) (6) (7)(8) (9)

(1):Series type:DIP DC POWER JACK.
(2):Series No.
(3):Schematic option: A
(4):Center pin diameter:
H=ø2.0 , J=ø2.5 , K=ø3.0
(5):Material of housing:
PB=PBT
(6):Housing color:
BK=Black (Standard)
8D=Gray (XH1095)427C
(7):Terminal plating
S=Silver(Ag 8u")
T=Tin(sn 120u")
(8):Special option:
0=No special option
(9):Packing mode:
3=Plastic box packing
4=Bag packing

Specification:
1.Rating :DC 12V 5A.
2.Contact resistance :≤30mΩ
After test:≤50mΩ
3.Insulation resistance : ≥100MΩ (500VDC).
After test:≥50MΩ
4.Withstanding voltage: 500VAC .
5.Insertion and extraction force: 3N~30N.
6.life test: 5000cycles min.
7.Operation temperature range:-20℃~70℃.
8.Preservative temperature range:-40℃~85℃.

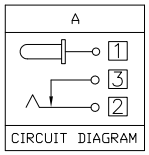

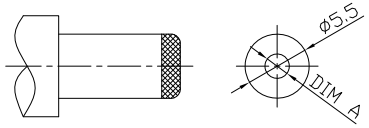

DC MATE PLUG

Model No.	H	J	K
CENTER PIN	ø2.0	ø2.5	ø3.0
PLUG O.D.	$ø2.05^{+0.10}_{-0.00}$	$ø2.55^{+0.10}_{-0.00}$	$ø3.05^{+0.10}_{-0.00}$

○: ITEM NO. □: TERMINAL NO.

NO.	PARTS	MATERIAL	Q'TY	FINISHING
⑥	Shunt terminal [3]	Brass (C2680 t=0.3)	1	See"Ordering information"
⑤	Tip spring [2]	Phosphor bronze (C5210 t=0.3)	1	See"Ordering information"
④	Center pin terminal [1]	Brass (C2680 t=0.40)	1	See"Ordering information"
③	Center pin [1]	Brass (H65)	1	CuSn plating
②	Cover	PBT UL94V-0	1	Black
①	Housing	PBT UL94V-0	1	See P/□

TOLERANCE	ANGLES
±0.3	±2°

THESE DRAWINGS AND SPECIFICATIONS ARE THE PROPERTY OF ACCURATE INNOTECH INC AND SHALL NOT BE REPRODUCED, COPIED OR USED IN ANY MANNER WITHOUT THE PRIOR WRITTEN CONSENT OF ACCURATE INNOTECH INC.

UNITS mm

MAT'L SEE NOTE

FINISH SEE NOTE

Q'TY

LONGCHUANG ZHONGYE (HK)CO.,LIMITED

TITLE: DIP DC POWER JACK

PART NO.: DCB0-0012D

DR: Ricky 2019/03/07

DWG NO.: AB0-0012D

CHKD: Ricky 2019/03/07

APPD:

SCALE	SHEET	REV.	CUSTOMER DRAWING
1:1	1/1	A	

龙创中业 开关 插座 连接器 LCZY SWITCH