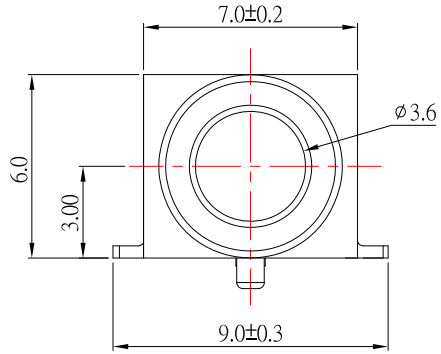

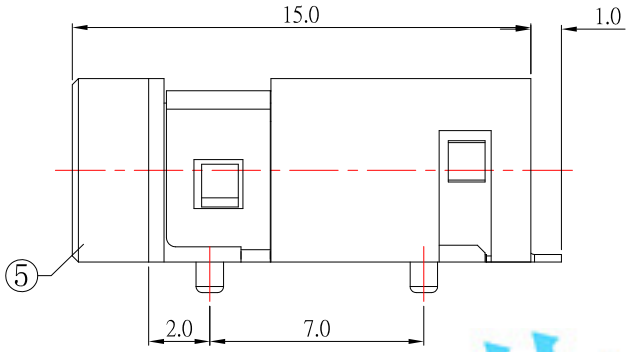

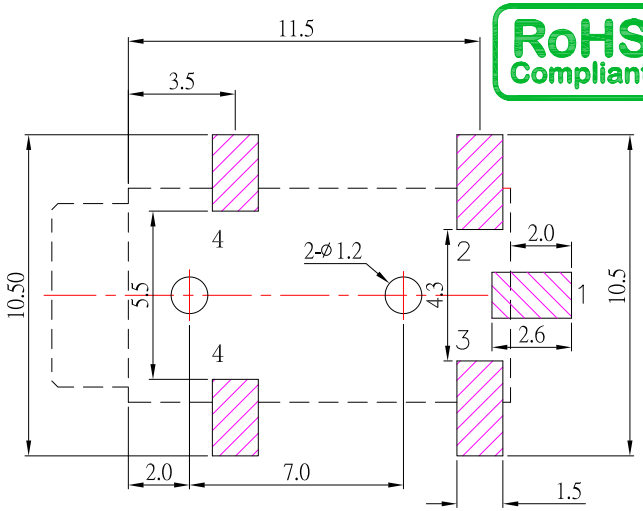

P.C.B LAYOUT
TOP VIEW

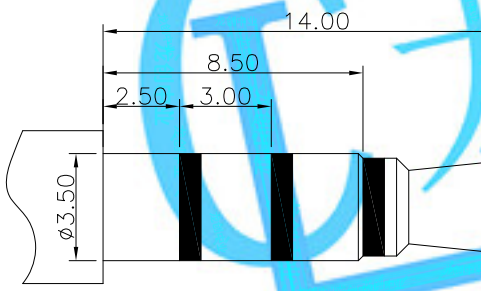

⌀3.50mm 4 POLE PLUG

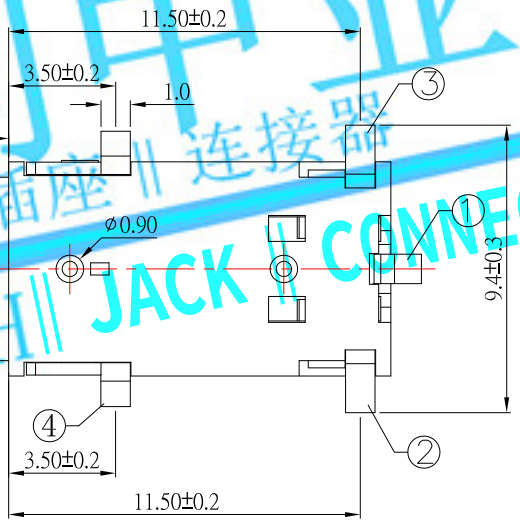

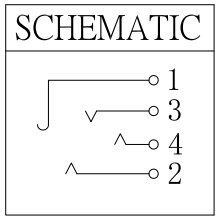

SPECIFICATIONS

1.Rating ：DC 30V 0.5A
2.Contact resistance：≤30mΩ
3.Insulation resistance：≥100MΩ
4.Withstand voltage：500VAC
5.Insertion and extraction force：3-20N
6.life test：5,000 cycles

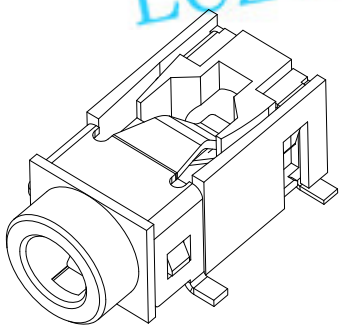

NO.	DESCRIPTION	QTY	MATERIAL	PLATING
5	HOUSING	1	PA9T	
4	4# CONTACT FOOT	1	PHOSPHOR BRONZE	Ag-Plating
3	3#CONTACT FOOT	1	PHOSPHOR BRONZE	Ag-Plating
2	2# CONTACT FOOT	1	PHOSPHOR BRONZE	Ag-Plating
1	1# CONTACT FOOT	1	PHOSPHOR BRONZE	Ag-Plating

ITEM NO.	DESCRIPTION	DRAWN	DATE
1	更新樣式及尺寸	Jack	032919

LONGCHUANG ZHONGYE (HK)CO.,LIMITED

TOLERANCE UNLESS OTHERWISE STATED：Up to 5 ±0.2; Above 5 ~ 15 ±0.3; Above 15 ~ 30 ±0.4; Above 30 ~ 50 ±0.5; Angle ±0.3°

3RD. ANGEL'S | UNITS MM

DRAWN BY: Jack Lu	DATE 03/29/19	MAT'L		TITLE	JACK
CHECKED BY: Jacky Chen	DATE 03/29/19	FINISH		MODLE	PHONE JACK
APPROVED BY: Tony Kao	DATE 03/29/19	SCALE	1 : 1	DWG NO.	PJ-S3022-S124
		SHEET NO.	1 of 1	PART NO.	PJ-S3022-S124

SIZE A4 | VER R1

龙创中业 开关 插座 连接器 LCZY SWITCH JACK CONNECTOR