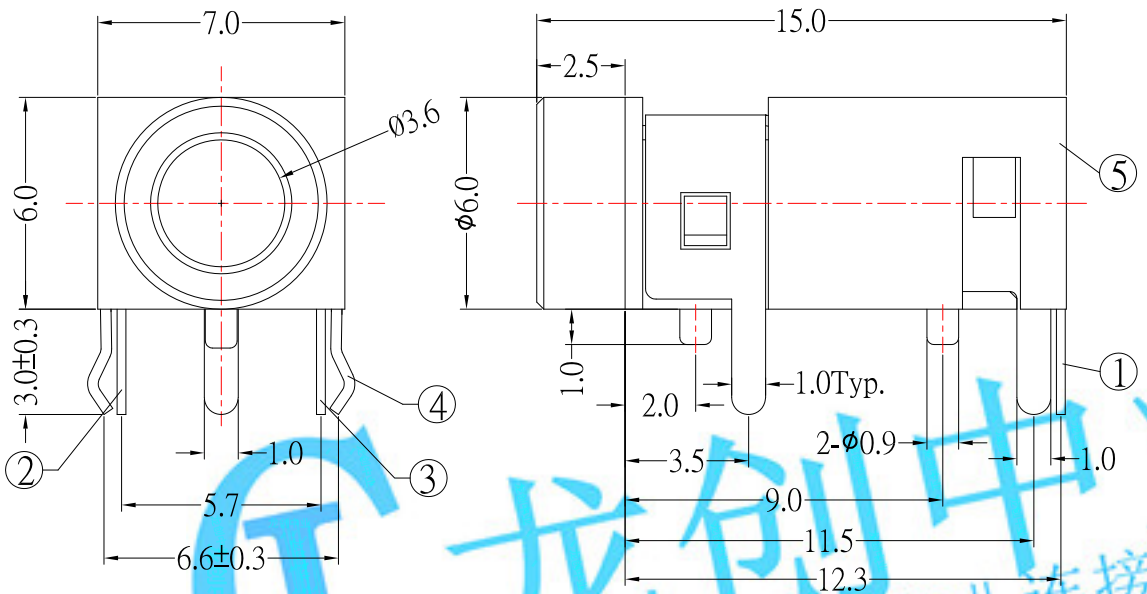

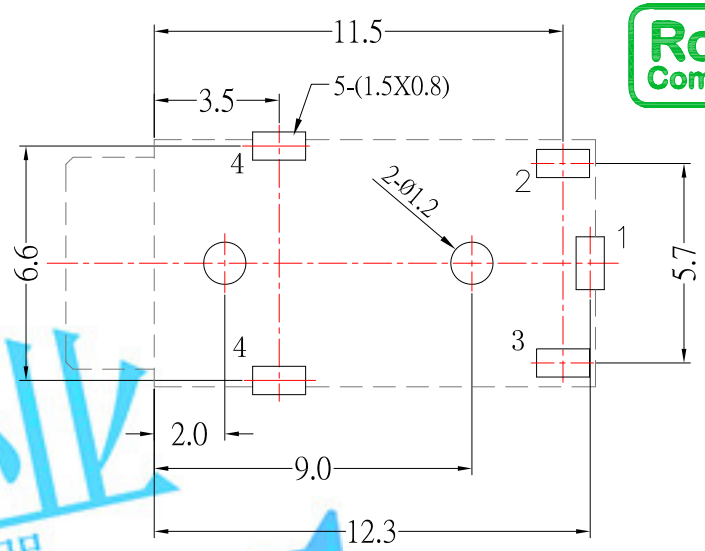

P.C.B LAYOUT MOUNTING PATTERN
(TOP VIEW)

MODEL NO.	PJ-D3022-S124
SCHEMATIC	1, 3, 4, 2

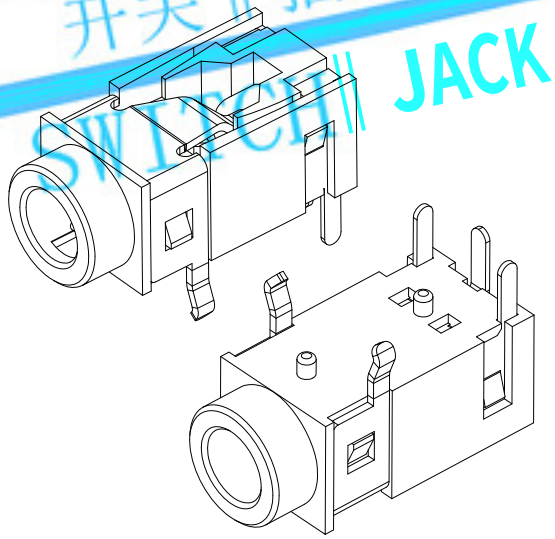

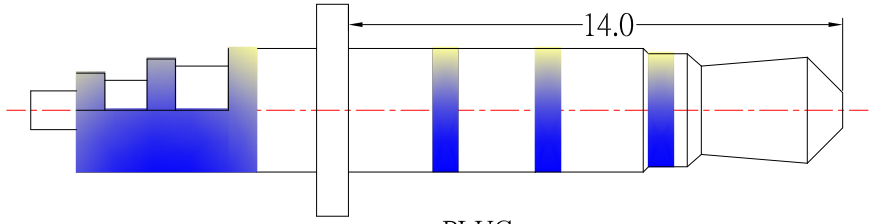

PLUG

SPECIFICATION

1.Rating ：DC 30V 0.5A；
2.Contact resistance：≤30mΩ；
3.Insulation resistance：≥100MΩ；
4.Withstand voltage：500VAC ；
5.Insertion and extraction force：3-20N
6.life test：5,000 cycles。

NO.	DESCRIPTION	QTY	MATERIAL	PLATING
5	HOUSING	1	PBT	
4	CONTACT FOOT #4	1	Phosphor Bronze	Sn-Plating
3	CONTACT FOOT #3	1	Brass	Sn-Plating
2	CONTACT FOOT #2	1	Phosphor Bronze	Sn-Plating
1	CONTACT FOOT #1	1	Phosphor Bronze	Sn-Plating

ITEM NO.	DESCRIPTION	DRAWN	DATE
1	更新爲A0版	Jack	102616

LONGCHUANG ZHONGYE (HK)CO.,LIMITED

TOLERANCE UNLESS OTHERWISE STATED : Up to 5 ±0.2; Above 5 ~ 15 ±0.3; Above 15 ~ 30 ±0.4; Above 30 ~ 50 ±0.5; Angle ±0.3°

3RD. ANGEL'S | UNITS | MM

DRAWN BY: Jack Lu	DATE 10/26/16	MAT'L		TITLE	JACK
CHECKED BY: Jacky Chen	DATE 10/26/16	FINISH		MODLE	PHONE JACK
APPROVED BY: Tony Kao	DATE 10/26/16	SCALE	1 : 1	DWG NO.	PJ-D3022-S124
		SHEET NO.	1 of 1	PART NO.	PJ-D3022-S124

SIZE A4 | VER A0

龙创中业
开关 ‖ 插座 ‖ 连接器
LCZY SWITCH ‖ JACK ‖ CONNECTOR