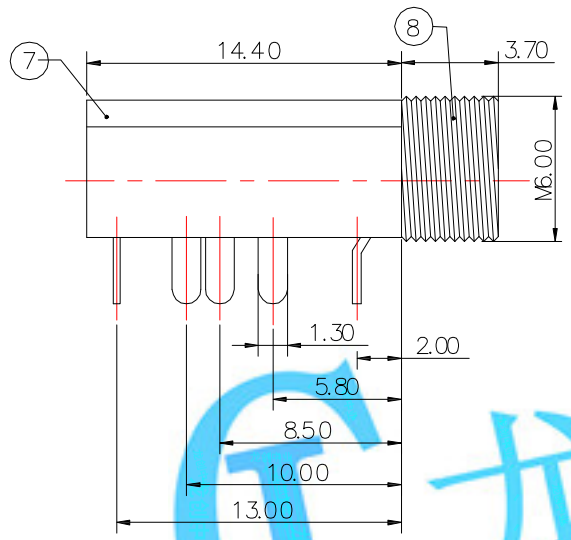


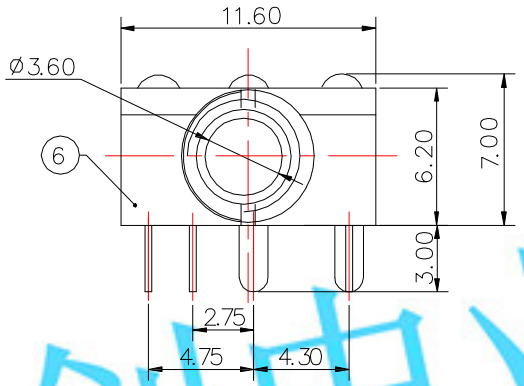


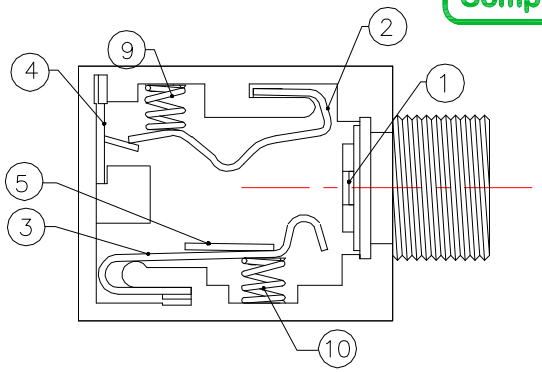

Internal construction

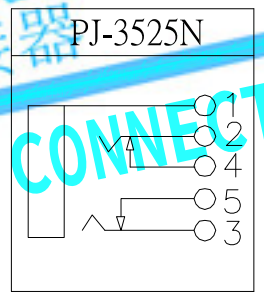


SPECIFICATION

1.Rating ：DC 30V 1.0A

2.Contact resistance：≤100mΩ

3.Insulation resistance：≥100MΩ

4.Withstand voltage：500VAC

5.Insertion and extraction force：3-25N

6.life test：5,000 cycles

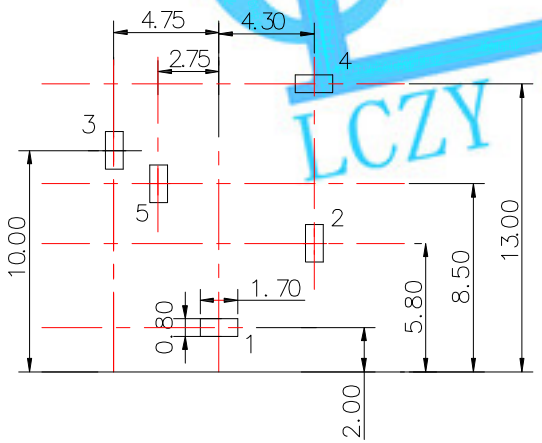


PCB LAYOUT

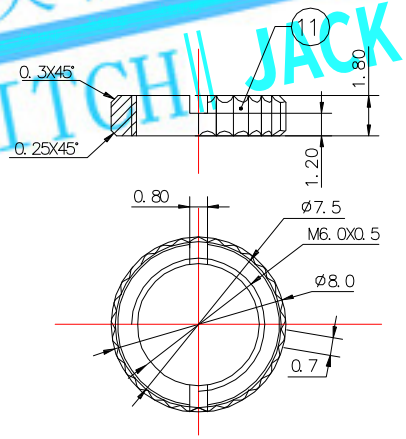


NUT

| NO. | DESCRIPTION | QTY | MATERIAL | PLATING |
|---|---|---|---|---|
| ⑪ | NUT | 1 | H59 | Ni-Plating |
| ⑩ | SPRING-5 | 1 | 72A | Ni-Plating |
| ⑨ | SPRING-3 | 1 | 72A | Ni-Plating |
| ⑧ | SOCKET | 1 | H59 | Ni-Plating |
| ⑦ | COVER | 1 | PC | Transparent |
| ⑥ | HOUSING | 1 | PA66 | Black |
| ⑤ | TERMINAL-5 | 1 | BRASS | Ag-Plating |
| ④ | TERMINAL-4 | 1 | BRASS | Ag-Plating |
| ③ | TERMINAL-3 | 1 | BRASS | Ag-Plating |
| ② | TERMINAL-2 | 1 | BRASS | Ag-Plating |
| ① | TERMINAL-1 | 1 | BRASS | Ag-Plating |

| ITEM NO. | DESCRIPTION | DRAWN | DATE |
|---|---|---|---|
| 2 | 新增SPEC | Jack | 110315 |
| 1 | 更新材質 | Jack | 091815 |

LONGCHUANG ZHONGYE (HK)CO.,LIMITED

TOLERANCE UNLESS OTHERWISE STATED : Up to 5 ±0.2; Above 5 ~ 15 ±0.3; Above 15 ~ 30 ±0.4; Above 30 ~ 50 ±0.5; Angle ±0.3°

3RD. ANGEL'S

UNITS MM

| | | | | | |
|---|---|---|---|---|---|
| DRAWN BY: Jack Lu | DATE 11/03/15 | MAT'L | | TITLE | JACK |
| CHECKED BY: Jacky Chen | DATE 11/03/15 | FINISH | | MODLE | PHONE JACK |
| APPROVED BY: Tony Kao | DATE 11/03/15 | SCALE | 1 : 1 | DWG NO. | PJ-3525N-S258 |
| | | SHEET NO. | 1 of 1 | PART NO. | PJ-3525N-S258 |

SIZE A4 VER R2

龙创中业 开关‖插座‖连接器 LCZY SWITCH‖JACK‖CONNECTOR