RoHS Compliant

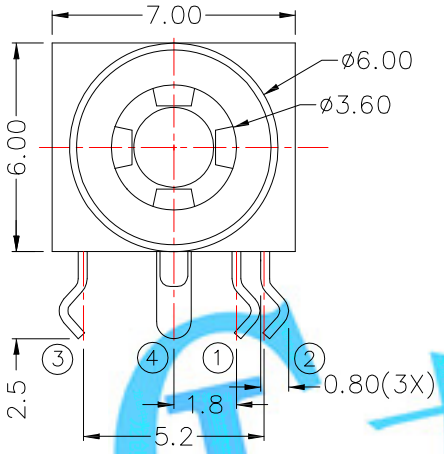

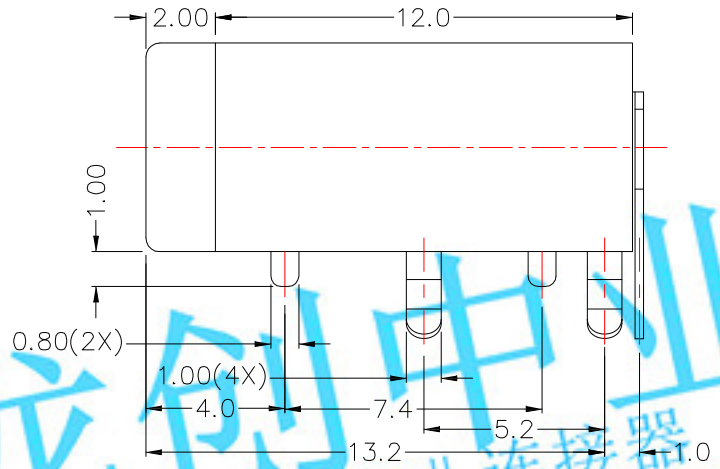

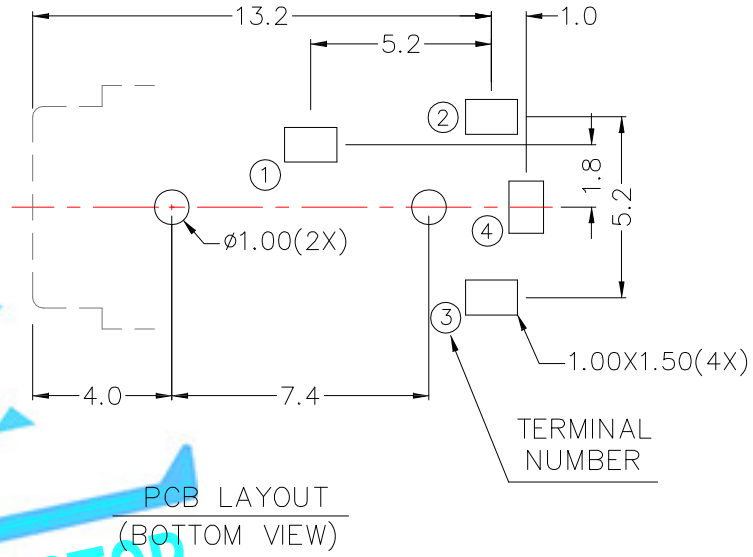

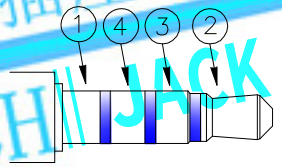

ø3.5 MATE PLUG

MODEL NO.	PJ-3724	PJ-3723
SCHEMATIC	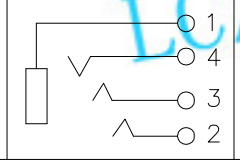	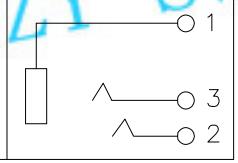

✳MATERIAL

TERMINAL 1 : PHOSPHOR BRONZE
TERMINAL 2 : PHOSPHOR BRONZE
TERMINAL 3 : PHOSPHOR BRONZE
TERMINAL 4 : PHOSPHOR BRONZE
HOUSING : PBT

SPECIFICATION

1.Rating : DC 12V 1.0A
2.Contact resistance : ≤50mΩ
3.Insulation resistance : ≥100MΩ
4.Withstand voltage : 500VAC
5.Insertion and extraction force : 3-30N
6.life test : 5,000 cycles

龙创中业
开关 ‖ 插座 ‖ 连接器
LCZY SWITCH ‖ JACK ‖ CONNECTOR

ITEM NO.	DESCRIPTION	DRAWN	DATE
1	新增SPEC	Jack	110315

LONGCHUANG ZHONGYE (HK)CO.,LIMITED

TOLERANCE UNLESS OTHERWISE STATED : Up to 5 ±0.2; Above 5 ~ 15 ±0.3; Above 15 ~ 30 ±0.4; Above 30 ~ 50 ±0.5; Angle ±0.3°

3RD. ANGEL'S | UNITS MM

DRAWN BY: Jack Lu	DATE 11/03/15	MAT'L	
CHECKED BY: Jacky Chen	DATE 11/03/15	FINISH	
APPROVED BY: Tony Kao	DATE 11/03/15	SCALE 1 : 1	SHEET NO. 1 of 1

TITLE	JACK		
MODLE	PHONE JACK		
DWG NO.	PJ-372x	SIZE	A4
PART NO.	PJ-372x	VER	R1