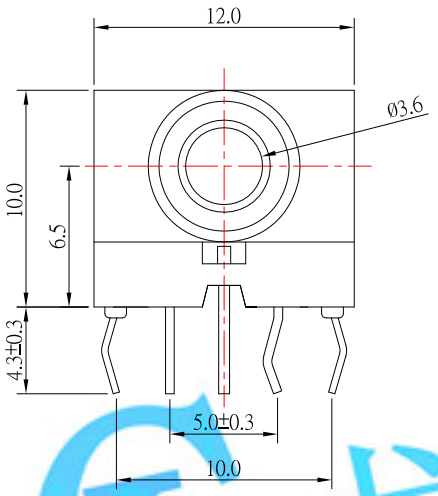

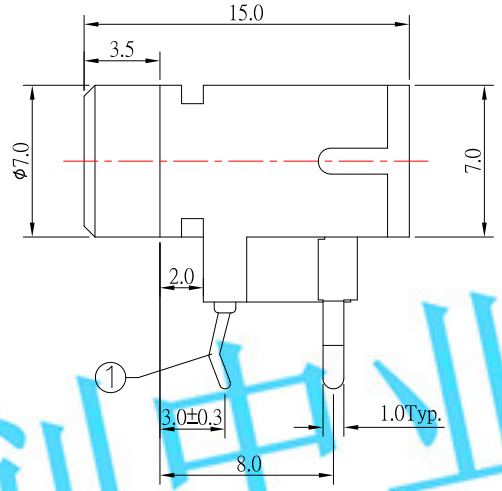

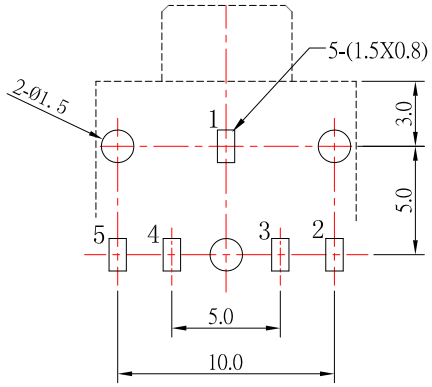

P.C.B LAYOUT MOUNTING PATTERN
(TOP VIEW)

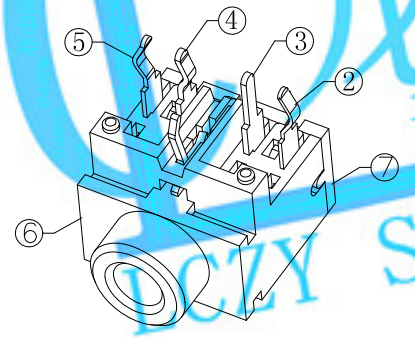

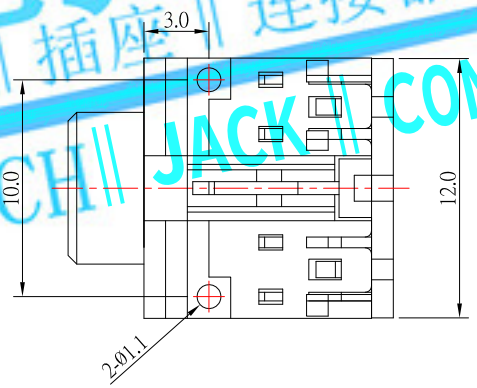

SPECIFICATION

1.Rating ：DC 30V 0.5A；
2.Contact resistance：≤30mΩ；
3.Insulation resistance：≥100MΩ；
4.Withstand voltage：500VAC ；
5.Insertion and extraction force：3-30N
6.life test：5,000 cycles。

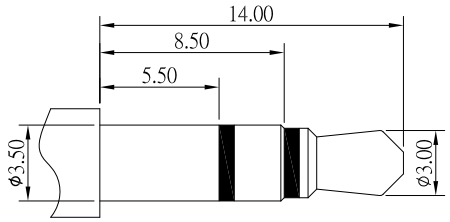

Ø3.50mm 3 POLE PLUG

SCHEMATIC

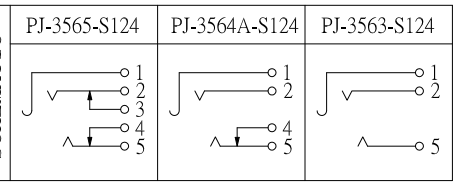

NO.	DESCRIPTION	QTY	MATERIAL	PLATING
7	COVER	1	PBT	
6	HOUSING	1	PBT	
5	5# CONTACT FOOT	1	PHOSPHOR BRONZE	Sn-Plating
4	4# CONTACT FOOT	1	BRASS	Sn-Plating
3	3# CONTACT FOOT	1	BRASS	Sn-Plating
2	2# CONTACT FOOT	1	PHOSPHOR BRONZE	Sn-Plating
1	1# CONTACT FOOT	1	BRASS	Sn-Plating

ITEM NO.	DESCRIPTION	DRAWN	DATE
3	更新樣式	Jack	090518
2	更新爲A0版	Jack	011017
1	更新SPEC	Jack	122916

LONGCHUANG ZHONGYE (HK)CO.,LIMITED

TOLERANCE UNLESS OTHERWISE STATED : Up to 5 ±0.2; Above 5 ~ 15 ±0.3; Above 15 ~ 30 ±0.4; Above 30 ~ 50 ±0.5; Angle ±0.3°

3RD. ANGEL'S

UNITS MM

DRAWN BY: Jack Lu	DATE 09/05/18	MAT'L	
CHECKED BY: Jacky Chen	DATE 09/05/18	FINISH	
APPROVED BY: Tony Kao	DATE 09/05/18	SCALE 1 : 1	SHEET NO. 1 of 1

TITLE	JACK		
MODLE	PHONE JACK		
DWG NO.	PJ-356x-S124	SIZE	A4
PART NO.	PJ-356x-S124	VER	A1

龙创中业
开关 || 插座 || 连接器
JACK || CONNECTOR
LCZY SWITCH