REV.	ECN. NO.	APPD.

Pb Process Capable

RoHS Compliant 2002/95/EC

DIMENSIONS

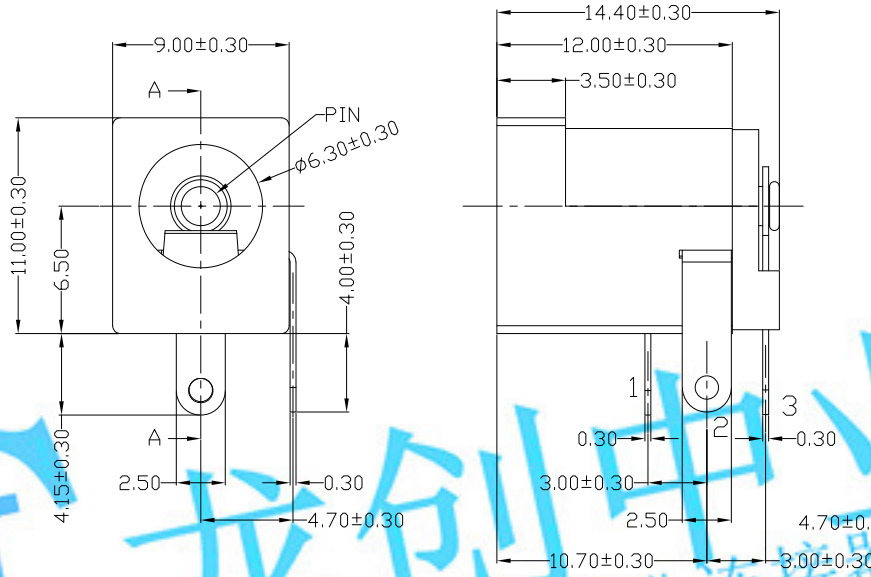

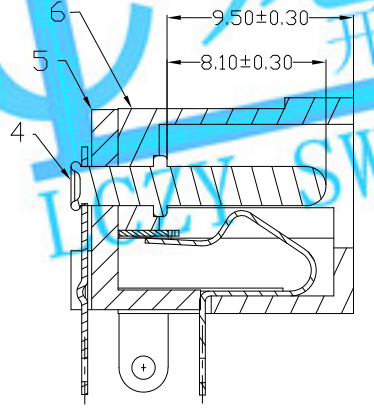

A-A' SECTION

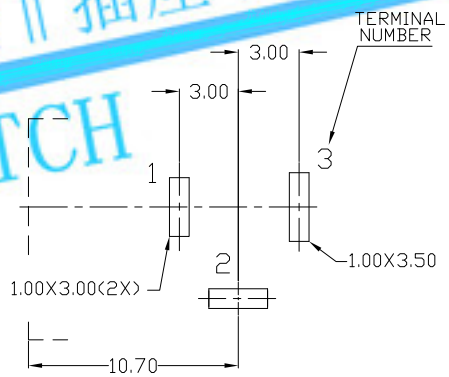

RECOMMENDED PCB LAYOUT

(TOP VIEW)

MODEL CODE:

DCS0-0203B- A □ PB BK T 0 4

(1) (2) (3)(4) (5) (6) (7)(8) (9)

(1):Series type:DIP DC POWER JACK.
(2):Series No.
(3):Schematic option: A
(4):Center pin diameter:
G=ø1.65 , H=ø2.0 , J=ø2.5
(5):Material of housing:
PB=PBT
(6):Housing color:
BK=Black
(7):Terminal plating
T=Tin(Sn)
(8):Special option:
0=No special option
(9):Packing mode:
4=Bag packing

Specification:
1.Rating :DC 30V 3A.
2.Contact resistance :≤100mΩ.
3.Insulation resistance :≥100MΩ (DC250V).
4.Withstanding voltage: 500VAC .
5.Insertion and extraction force: 3~30N.
6.life test: 5000cycles min.
7.Operation temperature range:-25°C~85°C

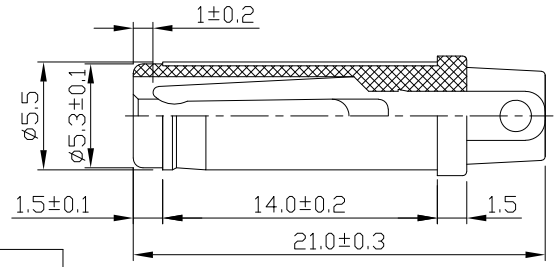

DC MATE PLUG

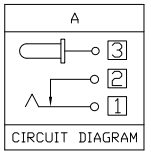

Model No.	G	H	J
CENTER PIN	ø1.65	ø2.0	ø2.5

UNLESS OTHERWISE SPECIFIED,
DIMENSIONs TOLERANCE ON DECIMALs ±0.2

Bill of materials:

NO.	PARTS	MATERIAL	Q'TY	FINISHING
6	HOUSING	PA9T	1	BLACK
5	COVER	PA9T	1	BLACK
4	CONTACT PIN	BRASS	1	Ni 50u"
3	PIN TERMINAL	BRASS	1	Tin 100u";Ni 50u"
2	SPRING SHUNT	BRASS	1	Tin 100u";Ni 50u"
1	SPRING PIECE	BRONZE	1	Tin 100u";Ni 50u"

TOLERANCE	ANGLES
.X ± 0.3	X°.±5°
.XX ± 0.2	.X°±3°

UNITS mm

MAT'L SEE NOTE

FINISH SEE NOTE

Q'TY

THESE DRAWINGS AND SPECIFICATIONS ARE THE PROPERTY OF ACCURATE INNOTECH INC AND SHALL NOT BE REPRODUCED, COPIED OR USED IN ANY MANNER WITHOUT THE PRIOR WRITTEN CONSENT OF ACCURATE INNOTECH INC.

LONGCHUANG ZHONGYE (HK)CO.,LIMITED

TITLE: DIP DC POWER JACK	PART NO.: DCS0-0203B
DR: Ricky 2019/03/21	DWG NO.: ASS-0203B
CHKD: Ricky 2019/03/21	SCALE 1:1 / SHEET 1/1 / REV. A / CUSTOMER DRAWING
APPD:	

龙创中业 开关 插座 连接器 LCZY SWITCH