Process Capable

RoHS Compliant 2002/95/EC

REV.	ECN. NO.	APPD.

DIMENSIONS

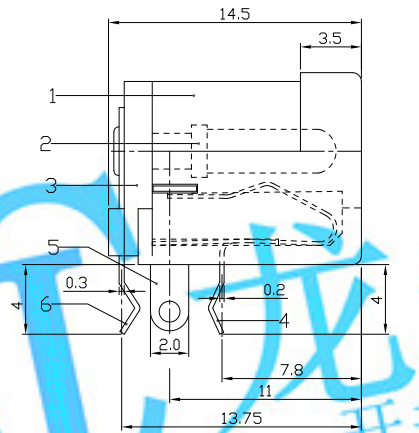

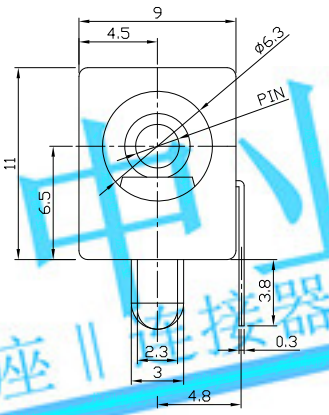

MODEL CODE:

DCE0-02410- A □ 66 BK S 0 4

(1) (2) (3)(4) (5) (6) (7)(8) (9)

(1):Series type:DIP DC POWER JACK.
(2):Series No.
(3):Schematic option: A
(4):Center pin diameter:
H=ø2.0 , I=ø2.35 , J=ø2.5
(5):Material of housing:
66=PA66
(6):Housing color:
BK=Black
(7):Terminal plating
S=Silver(Ag)
(8):Special option:
0=No special option
(9):Packing mode:
4=Bag packing

Specification:
1.Rating :DC 30V 0.3A.
2.Contact resistance :≤100mΩ.
3.Insulation resistance :≥100MΩ (500VDC).
4.Withstanding voltage: 500VAC .
5.Insertion and extraction force: 0.3~3Kgs.
6.life test: 5000cycles min.
7.Operation temperature range:-25°C~85°C

龙创电业
开关‖插座‖连接器
LCZY SWITCH

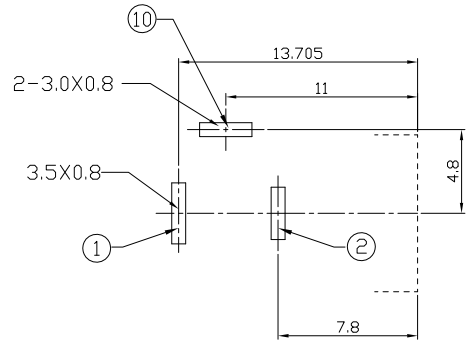

P.C.B LAYOUT

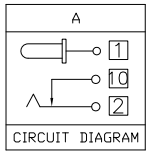

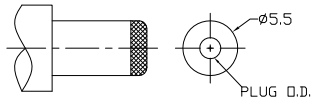

DC MATE PLUG

Model No.	H	I	J
CENTER PIN	ø2.0	ø2.35	ø2.5
PLUG O.D.	$2.05^{+0.10}_{-0.00}$	$2.40^{+0.10}_{-0.00}$	$2.55^{+0.10}_{-0.00}$

Bill of materials:

NO.	PARTS	MATERIAL	Q'TY	FINISHING
6	TERMINAL	BRASS STRIP	1	Ag PLATED
5	TERMINAL	BRASS STRIP	1	Ag PLATED
4	SPRING TERMINAL	SUS	1	Ag PLATED
3	COVER	PA66	1	BLACK
2	PLUG PIN	BRASS	1	Ni PLATED
1	CASE	PA66	1	BLACK

GENERAL TOLERANCE
WITHIN 1.5mm±0.1mm
OVER 1.5mm±0.2mm

THESE DRAWINGS AND SPECIFICATIONS ARE THE PROPERTY OF ACCURATE INNOTECH INC AND SHALL NOT BE REPRODUCED, COPIED OR USED IN ANY MANNER WITHOUT THE PRIOR WRITTEN CONSENT OF ACCURATE INNOTECH INC.

UNITS mm
MAT'L SEE NOTE
FINISH SEE NOTE
Q'TY

LONGCHUANG ZHONGYE (HK)CO.,LIMITED

TITLE: DIP DC POWER JACK		PART NO.: DCE0-02410	
DR: Ricky 2019/03/19		DWG NO.: AZJ-02410	
CHKD: Ricky 2019/03/19			
APPD:	SCALE 1:1	SHEET 1/1	REV. A	CUSTOMER DRAWING