Pb Process Capable

RoHS Compliant 2002/95/EC

REV.	ECN. NO.	APPD.

DIMENSIONS

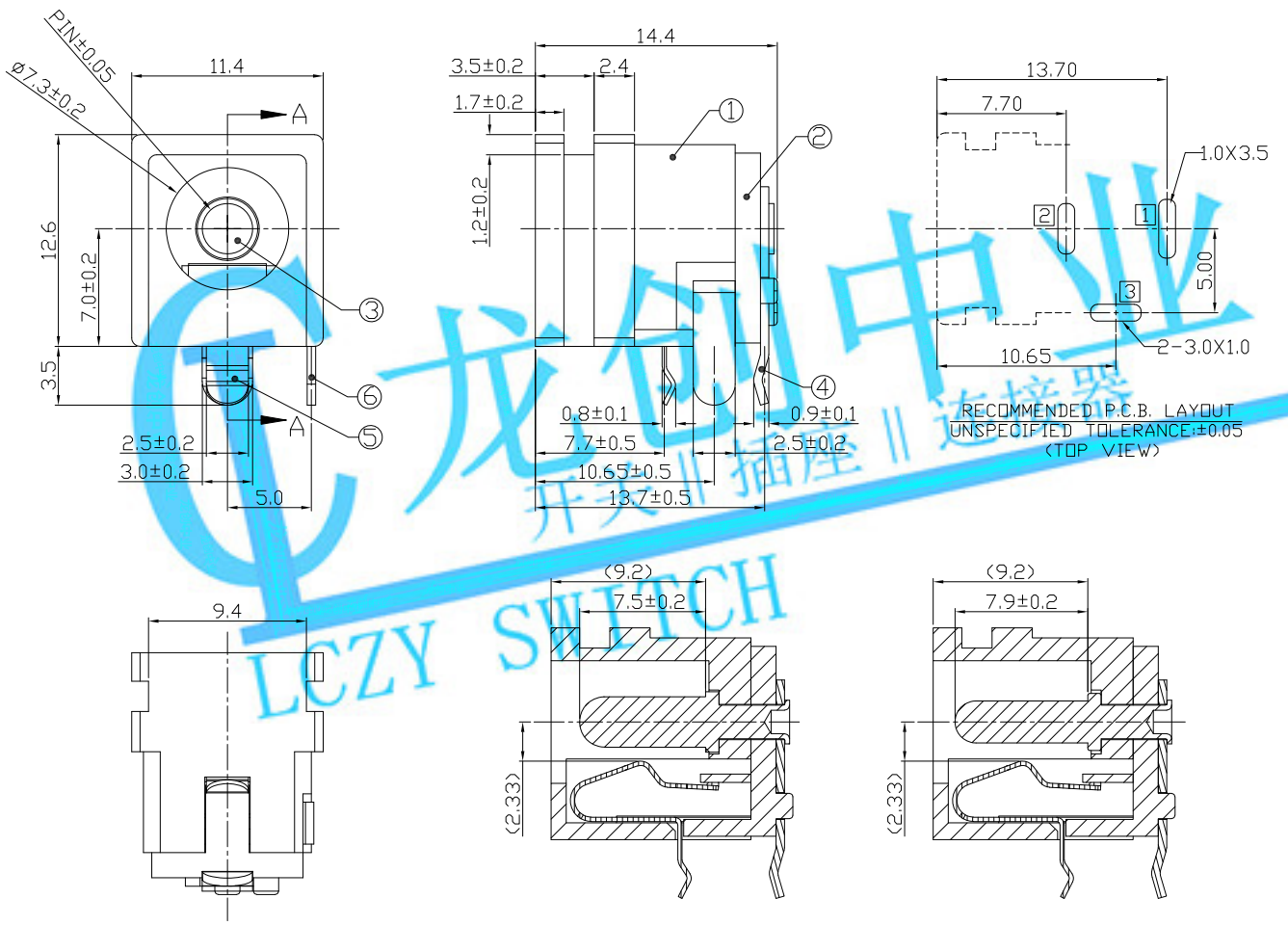

SECTION A-A
(插针规格：ø3.0)

SECTION A-A
(插针规格：ø2.0 & ø2.5)

○: ITEM NO. □: TERMINAL NO.

MODEL CODE:

DCB0-00620- A □ PB BK T 0 4
(1) (2) (3)(4) (5) (6) (7)(8) (9)

(1):Series type:DIP DC POWER JACK.
(2):Series No.
(3):Schematic option: A , B
(4):Center pin diameter:
H=ø2.0 , J=ø2.5 , K=ø3.0
(5):Material of housing:
PB=PBT
(6):Housing color:
BK=Black
(7):Terminal plating
T=Tin(Sn)
S=Silver(Ag)
(8):Special option:
0=Tip spring is Stainless steel material
P=Tip spring is phosphor bronze material
H=Cover and housing are black Halogen Free, Tip spring is stainless steel material.
(9):Packing mode:
4=Bag packing

SPECIFICATION:
1.Rating : DC 20V 3A;
2.Contact resistance: ≤50mΩ;
After test:≤100mΩ
3.Insulation resistance: ≥100MΩ (DC500V);
After test:≥50MΩ
4.Withstand voltage: 500VAC ;
5.Insertion and extraction force: 3-30N;
6.life test: 5,000 cycles;
7.Operation temperature range:-20°C~70°C;
8.Preservative temperature range:-40°C~85°C;

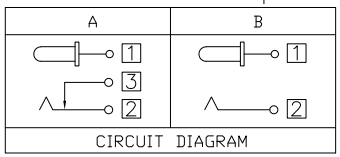

CIRCUIT DIAGRAM

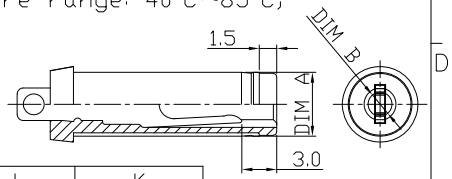

DC MATE PLUG

Model No.	H	J	K
CENTER PIN	ø2.0	ø2.5	ø3.0
DIM A	ø6.3±0.05	ø6.3±0.05	ø6.55±0.05
DIM B	$ø2.05^{+0.10}_{-0.00}$	$ø2.55^{+0.10}_{-0.00}$	$ø3.05^{+0.10}_{-0.00}$

NO.	PARTS	MATERIAL	Q'TY	FINISHING
⑥	Shunt terminal 3	Brass	1	See P/N ordering info
⑤	Tip spring 2	See P/N ordering info	1	
④	Center pin terminal 1	Brass	1	
③	Center pin	Copper Alloy	1	CuSn plating
②	Cover	Thermoplastic	1	Black
①	Housing	Thermoplastic	1	Black

TOLERANCE		ANGLES	
.X	±0.50	X	±5°
.XX	±0.30	.X	±3°
.XXX	±0.15	.XX	±2°

THESE DRAWINGS AND SPECIFICATIONS ARE THE PROPERTY OF ACCURATE INNOTECH INC AND SHALL NOT BE REPRODUCED, COPIED OR USED IN ANY MANNER WITHOUT THE PRIOR WRITTEN CONSENT OF ACCURATE INNOTECH INC.

UNITS mm
MAT'L SEE NOTE
FINISH SEE NOTE
Q'TY

LONGCHUANG ZHONGYE (HK)CO.,LIMITED

TITLE: DIP DC POWER JACK	PART NO.: DCB0-00620
DR: Ricky 2019/04/30	DWG NO.: AB0-00620
CHKD: Ricky 2019/04/30	SCALE 1:1 / SHEET 1/1 / REV. A / CUSTOMER DRAWING
APPD:	

龙创中业 开关 插座 连接器 LCZY SWITCH