Pb Process Capable

RoHS Compliant 2002/95/EC

REV.	ECN. NO.	APPD.

DIMENSIONS

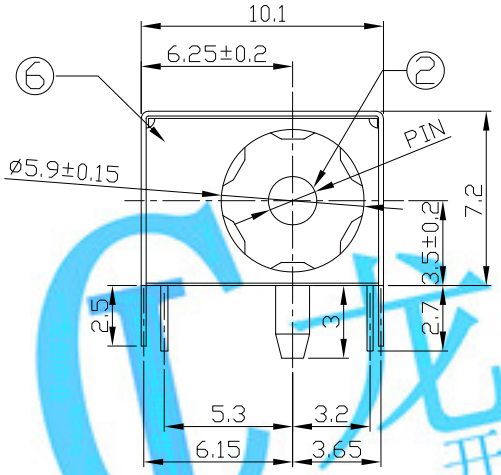

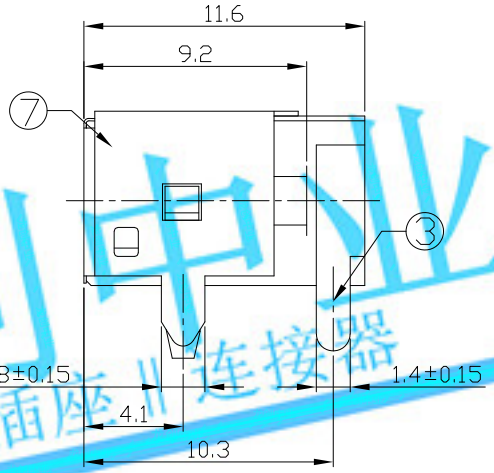

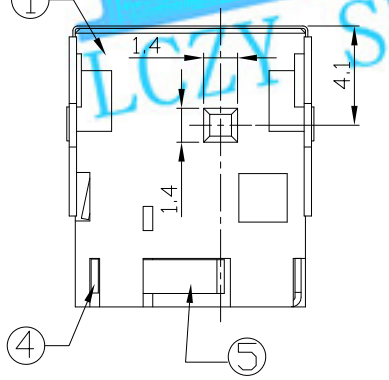

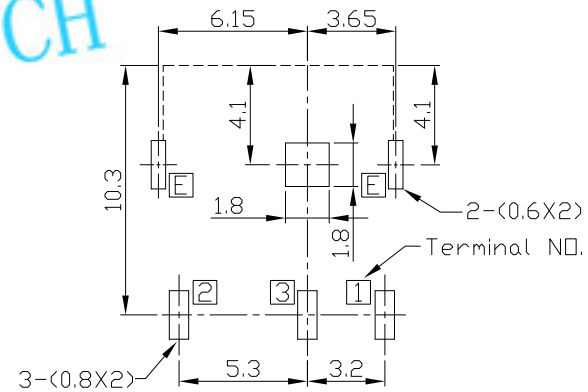

RECOMMENDED P.C.B. LAYOUT
UNSPECIFIED TOLERANCE:±0.05
(COPPER-SIDED VIEW)

○: ITEM NO. □: TERMINAL NO.

MODEL CODE:

DCB0-0044Q- A □ 9T BK S 0 4
(1) (2) (3)(4) (5) (6) (7)(8) (9)

(1):Series type:DIP DC POWER JACK.
(2):Series No.
(3):Schematic option: A , B
(4):Center pin diameter:
G=ø1.65 , H=ø2.0 , J=ø2.5
(5):Material of housing:
9T=PA9T(Standard) , PB=PBT
(6):Housing color:
BK=Black(Only)
(7):Terminal plating
S=Silver(Ag)(Standard)
T=Tin(Sn)
G=Gold(Au)
(8):Special option:
0=No special option
(9):Packing mode:
1=Reel packing
3=Plastic box packing
4=Bag packing

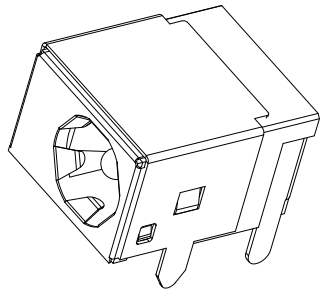

SPECIFICATION:
1.Rating : DC 25V 3A;
2.Contact resistance: ≤50mΩ;
After test:≤100mΩ
3.Insulation resistance: ≥100MΩ (DC500V);
After test:≥50MΩ
4.Withstand voltage: 500VAC ;
5.Insertion and extraction force: 3-30N;
6.life test: 5,000 cycles;
7.Operation temperature range:-20°C~70°C;
8.Preservative temperature range:-40°C~85°C;

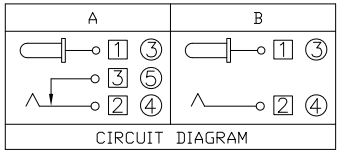

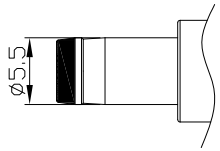

DC MATE PLUG

Model No.	G	H	J
CENTER PIN	ø1.65	ø2.0	ø2.5

NO.	PARTS	MATERIAL	Q'TY	FINISHING
⑦	Ground shield E	Copper Alloy	1	Ni-Plating
⑥	Shield plate	Stainless steel	1	Ni-Plating
⑤	Shunt Terminal 3	Copper Alloy	1	Ag-Plating
④	Tip Spring 2	Copper Alloy	1	Ag-Plating
③	Center pin contact 1	Copper Alloy	1	Ag-Plating
②	Center pin	Copper Alloy	1	Ni-Plating
①	Housing	PBT/PA9T	1	

TOLERANCE	ANGLES
±0.3	±2°

UNITS mm
MAT'L SEE NOTE
FINISH SEE NOTE
Q'TY

THESE DRAWINGS AND SPECIFICATIONS ARE THE PROPERTY OF ACCURATE INNOTECH INC AND SHALL NOT BE REPRODUCED, COPIED OR USED IN ANY MANNER WITHOUT THE PRIOR WRITTEN CONSENT OF ACCURATE INNOTECH INC.

LONGCHUANG ZHONGYE (HK)CO.,LIMITED

TITLE: DIP DC POWER JACK
PART NO.: DCB0-0044Q
DR: Ricky 2019/04/30
DWG NO.: AB0-0044Q
CHKD: Ricky 2019/04/30
APPD:

SCALE	SHEET	REV.	CUSTOMER DRAWING
1:1	1/1	A	

龙创中业 开关 插座 连接器 LCZY SWITCH