Process Capable

RoHS Compliant 2002/95/EC

REV.	ECN. NO.	APPD.

DIMENSIONS

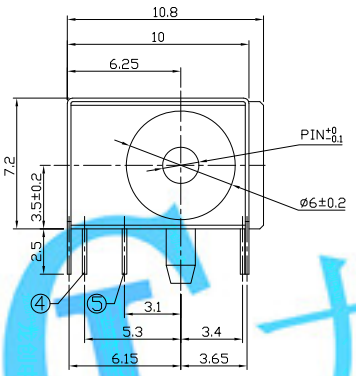

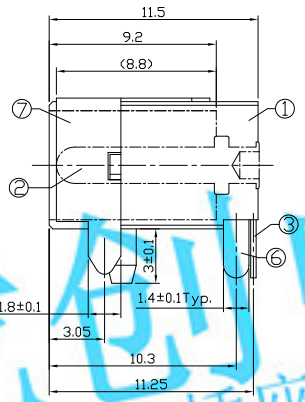

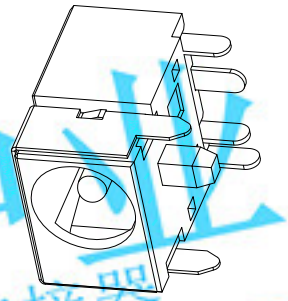

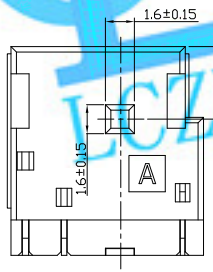

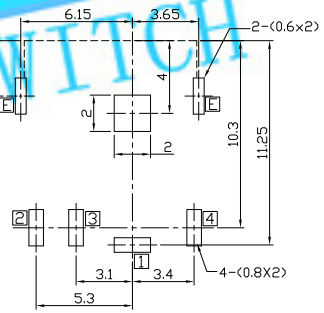

PCB HOLES(BOTTOM VIEW) t=1.6mm
NOTE:GENERAL TOLERANCE:±0.05mm
(BOTTOM VIEW)

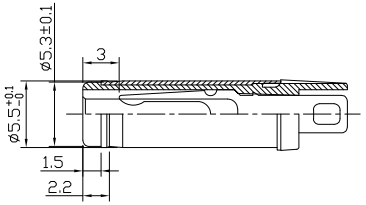

DC MATE PLUG

MODEL CODE:

DCB0-0044C- C □ PB BK S 0 4
(1) (2) (3)(4) (5) (6) (7)(8) (9)

(1):Series type:DIP DC POWER JACK.
(2):Series No.
(3):Schematic option: A , B , C , D
(4):Center pin diameter:
G=ø1.65 , H=ø2.0 , J=ø2.5
(5):Material of housing:
PB=PBT , 9T=PA9T , 10=PA10T
(6):Housing color:
BK=Black (Standard)
(7):Terminal plating
S=Silver(Ag)(Standard)
(8):Special option:
0=No special option
H=Housing is Halogen Free
(9):Packing mode:
1=Reel packing
3=Plastic box packing
4=Bag packing

SPECIFICATION:
1.Rating : DC 25V 3A;
2.Contact resistance: ≤30mΩ;
After test:≤50mΩ
3.Insulation resistance: ≥100MΩ (DC500V);
After test:≥50MΩ
4.Withstand voltage: 500VAC ;
5.Insertion and extraction force: 3-30N;
6.life test: 5,000 cycles;
7.Operation temperature range:-20°C~70°C;
8.Preservative temperature range:-40°C~85°C;

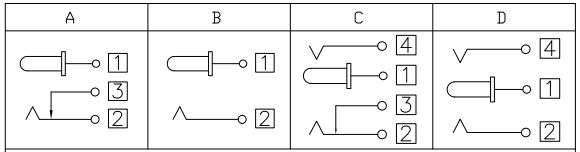

CIRCUIT DIAGRAM

Model No.	G	H	J
CENTER PIN	ø1.65	ø2.0	ø2.5

龙创中业 开关 插座 连接器 LCZY SWITCH

○: ITEM NO. □: TERMINAL NO.

NO.	PARTS	MATERIAL	Q'TY	FINISHING
⑦	Ground shield E	Brass t=0.2	1	Nickel plating
⑥	Tip spring-2 4	Phosphor Bronze t=0.25	1	Silver plating
⑤	Shunt Terminal 3	Brass t=0.3	1	Silver plating
④	Tip spring-1 2	Phosphor Bronze t=0.3	1	Silver plating
③	Center pin terminal 1	Brass t=0.3	1	Silver plating
②	Center pin	Copper alloy	1	Nickel plating
①	Housing	PBT/PA9T/PA10T	1	Black

TOLERANCE	ANGLES
±0.3	±2°

UNITS mm
MAT'L SEE NOTE
FINISH SEE NOTE
Q'TY

THESE DRAWINGS AND SPECIFICATIONS ARE THE PROPERTY OF ACCURATE INNOTECH INC AND SHALL NOT BE REPRODUCED, COPIED OR USED IN ANY MANNER WITHOUT THE PRIOR WRITTEN CONSENT OF ACCURATE INNOTECH INC.

LONGCHUANG ZHONGYE (HK)CO.,LIMITED

TITLE: DIP DC POWER JACK	PART NO.: DCB0-0044C
DR: Ricky 2019/04/29	DWG NO.: AB0-0044C
CHKD: Ricky 2019/04/29	SCALE 1:1 / SHEET 1/1 / REV. A / CUSTOMER DRAWING
APPD:	