REV.	ECN. NO.	APPD.

Process Capable

RoHS Compliant 2002/95/EC

DIMENSIONS

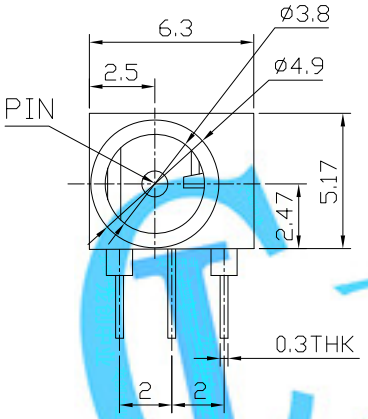

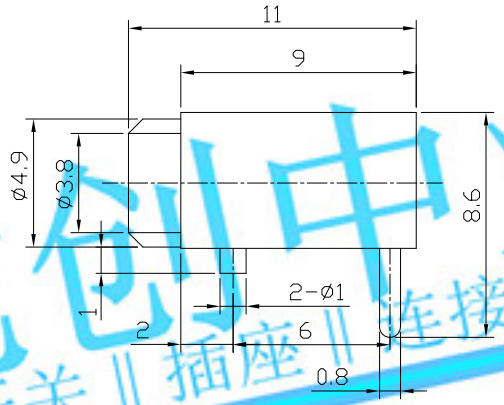

MODEL CODE:

DCE0-04130- A □ 66 BK S 0 4

(1) (2) (3)(4) (5) (6) (7)(8) (9)

(1):Series type:DIP DC POWER JACK.
(2):Series No.
(3):Schematic option: A
(4):Center pin diameter:
C=ø1.0 , E=ø1.3
(5):Material of housing:
66=PA66
(6):Housing color:
BK=Black
(7):Terminal plating
S=Silver(Ag)
(8):Special option:
0=No special option
(9):Packing mode:
4=Bag packing

Specification:
1.Rating :DC 30V 0.3A.
2.Contact resistance :≤100mΩ.
3.Insulation resistance :≥100MΩ (500VDC).
4.Withstanding voltage: 500VAC .
5.Insertion and extraction force: 0.3~3Kgs.
6.life test: 5000cycles min.
7.Operation temperature range:-25°C~85°C

龙创中业
开关‖插座‖连接器
LCZY SWITCH

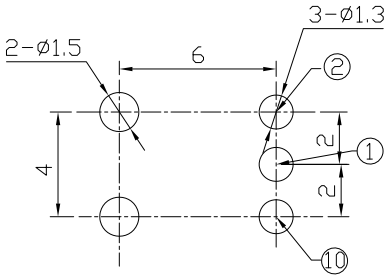

P.C.B LAYOUT

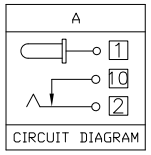

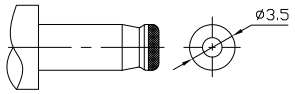

DC MATE PLUG

Model No.	C	E
CENTER PIN	ø1.0	ø1.3

Bill of materials:

NO.	PARTS	MATERIAL	Q'TY	FINISHING
6	PIN	BRASS	1	Ni PLATED
5	COVER	NYLON+F.G	1	BLACK
4	TERMINAL	BRASS STRIP	1	Ag PLATED
3	SPRING TERMINAL	PBS STRIP	1	Ag PLATED
2	TERMINAL	BRASS STRIP	1	Ag PLATED
1	CASE	NYLON+F.G	1	BLACK

GENERAL TOLERANCE
WITHIN 1.5mm±0.1mm
OVER 1.5mm±0.2mm

THESE DRAWINGS AND SPECIFICATIONS ARE THE PROPERTY OF ACCURATE INNOTECH INC AND SHALL NOT BE REPRODUCED, COPIED OR USED IN ANY MANNER WITHOUT THE PRIOR WRITTEN CONSENT OF ACCURATE INNOTECH INC.

UNITS mm
MAT'L SEE NOTE
FINISH SEE NOTE
Q'TY

龙创中业电子科技（东莞）有限公司

TITLE: DIP DC POWER JACK	PART NO.: DCE0-04130
DR: Ricky 2019/03/20	DWG NO.: AZJ-04130
CHKD: Ricky 2019/03/20	SCALE 1:1 / SHEET 1/1 / REV. A / CUSTOMER DRAWING
APPD:	