Pb Process Capable

RoHS Compliant 2002/95/EC

REV.	ECN. NO.	APPD.

DIMENSIONS

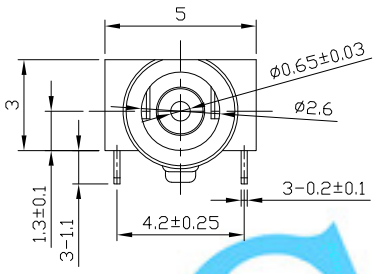

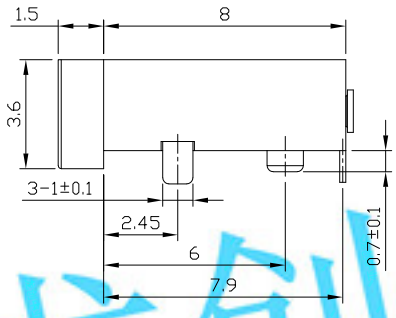

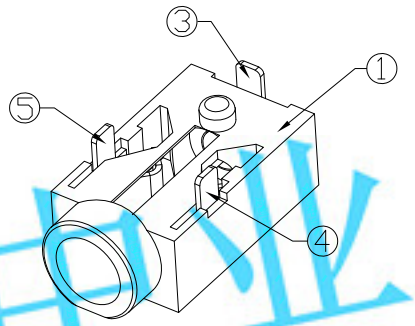

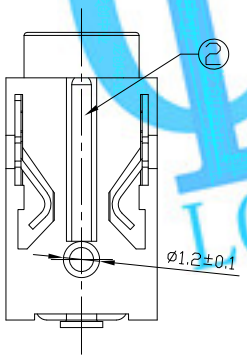

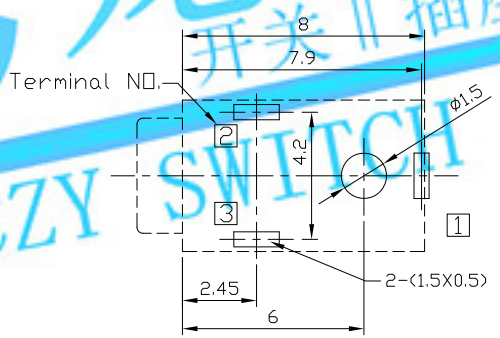

P.C.B Layout
(Top view)

MODEL CODE:

DCB0-0055B- D A 9T BK S 0 4
(1) (2) (3)(4)(5) (6) (7)(8) (9)

(1):Series type:DIP DC POWER JACK.
(2):Series No.
(3):Schematic option: D
(4):Center pin diameter:
A=ø0.65
(5):Material of housing:
9T=PA9T
(6):Housing color:
BK=Black , 9C=White(0419)
(7):Terminal plating
S=Silver(Ag)
(8):Special option:
0=No special option
(9):Packing mode:
1=Reel packing
4=Bag packing

SPECIFICATION:

1.Rating : DC 12V 1A;
2.Contact resistance: ≤30mΩ;
3.Insulation resistance: ≥100MΩ (DC500V);
4.Withstand voltage: 500VAC ;
5.Insertion and extraction force: 3-30N;
6.life test: 5,000 cycles;
7.Operation temperature range:-20°C~70°C;
8.Preservative temperature range:-40°C~85°C;

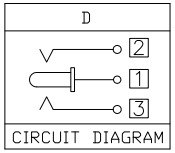

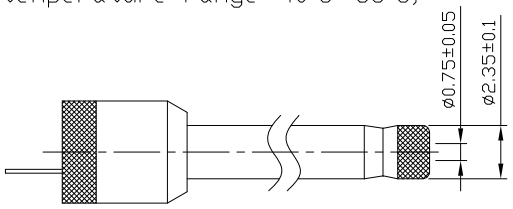

DC MATE PLUG

龙创中业 开关 | 插座 | 连接器 LCZY SWITCH

○: ITEM NO. □: TERMINAL NO.

NO.	PARTS	MATERIAL	Q'TY	FINISHING
⑤	Tip spring 3	Beryllium bronze	1	Silver plating
④	Tip spring 2	Beryllium bronze	1	Silver plating
③	Center pin terminal 1	Brass	1	Silver plating
②	Center pin 1	Brass	1	Silver plating
①	Housing	PA9T	1	

TOLERANCE	ANGLES
±0.3	±2°

UNITS mm
MAT'L SEE NOTE
FINISH SEE NOTE
Q'TY

THESE DRAWINGS AND SPECIFICATIONS ARE THE PROPERTY OF ACCURATE INNOTECH INC AND SHALL NOT BE REPRODUCED, COPIED OR USED IN ANY MANNER WITHOUT THE PRIOR WRITTEN CONSENT OF ACCURATE INNOTECH INC.

龙创中业电子科技（东莞）有限公司

TITLE: DIP DC POWER JACK	PART NO.: DCB0-0055B
DR: Ricky 2019/04/30	DWG NO.: AB0-0055B
CHKD: Ricky 2019/04/30	SCALE 1:1 / SHEET 1/1 / REV. A / CUSTOMER DRAWING
APPD:	