Pb Process Capable

RoHS Compliant 2002/95/EC

REV.	ECN. NO.	APPD.

MODEL CODE

SK-63D01-GDD

Knob Type	L(mm)
GDD	~

DIMENSIONS

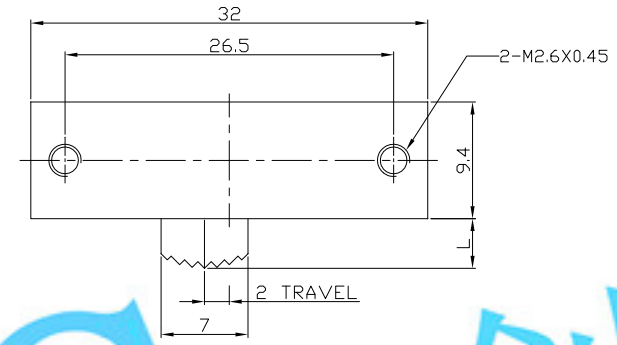

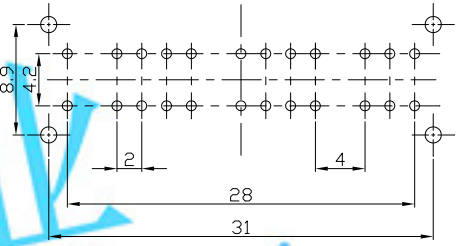

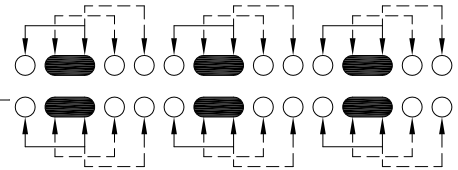

P.C.B LAYOUT
BOTTOM VIEW

CIRCUIT DIAGRAM

GDD Type

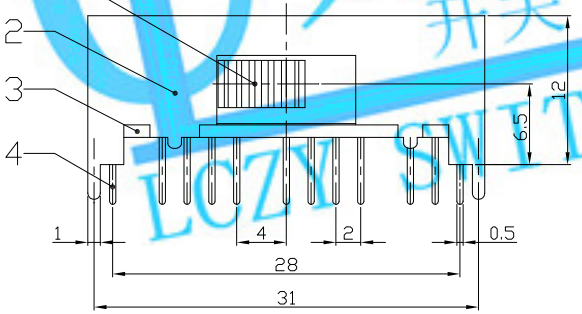

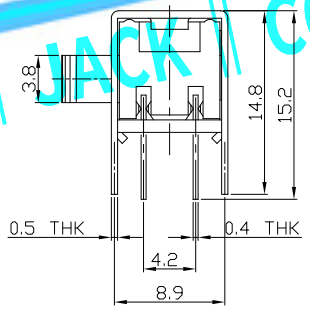

ELECTRO-MECHANICAL CHARACTERISTICS

Refer to additional specifications

RATING	0.3A 50V DC
CIRCUIT	6P3T
CONTACT RESISTANCE	100mΩ MAX.
TIMING	SHORTING
TRAVEL	2mm
OPERATING FORCE	300±100gf
OPERATING LIFE(cycles)	10,000

龙创中业 开关 || 插座 || 连接器 LCZY SWITCH || JACK || CONNECTOR

NO.	PARTS	MATERIAL	Q'TY	FINISHING
8				
7	STEEL BALL	STEEL	1	NATURAL
6	SPRING	STEEL WIRE	1	NATURAL
5	CONTACT CLIP	PBS STRIP	6	Ag PLATED
4	TERMINAL	BRASS STRIP	24	Ag PLATED
3	BASE	PHENOLIC RESIN	1	NATURAL
2	FRAME	STEEL STRIP	1	Ni PLATED
1	KNOB	POM	1	BLACK

WITHIN 1.5mm: ±0.1mm
OVER 1.5mm: ±0.2mm

THESE DRAWINGS AND SPECIFICATIONS ARE THE PROPERTY OF ACCURATE INNOTECH INC AND SHALL NOT BE REPRODUCED, COPIED OR USED IN ANY MANNER WITHOUT THE PRIOR WRITTEN CONSENT OF ACCURATE INNOTECH INC.

UNITS mm
MAT'L SEE NOTE
FINISH SEE NOTE
Q'TY

LONGCHUANG ZHONGYE (HK)CO.,LIMITED

TITLE: SLIDE SWITCH / HORIZONTAL
PART NO.: SK-63D01
DR: Ricky 2016/07/18
DWG NO.: ADL-63D01
CHKD: Ricky 2016/07/18
APPD:

SCALE	SHEET	REV.	CUSTOMER DRAWING
3:2	1/1	A	