Pb Process Capable

RoHS Compliant 2002/95/EC

REV.	ECN. NO.	APPD.

DIMENSIONS

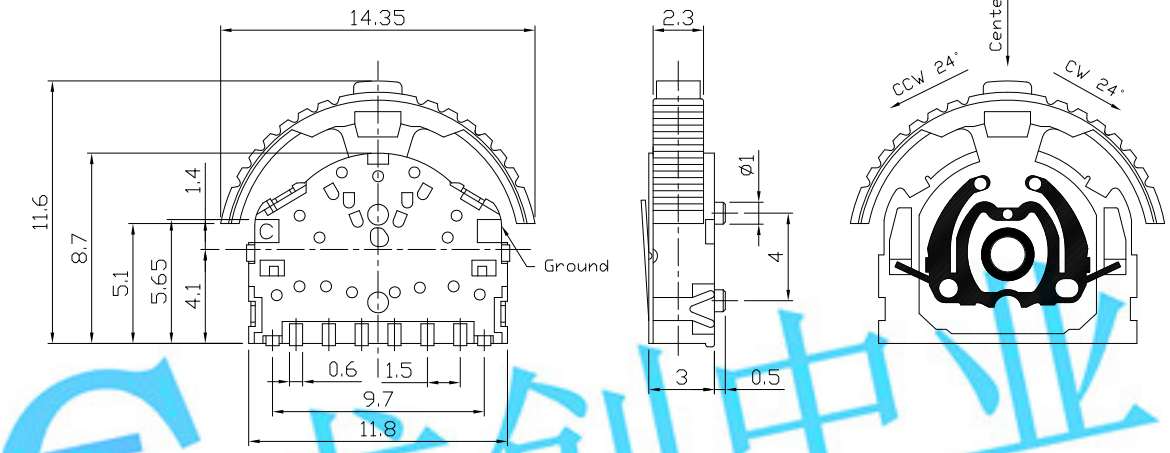

CIRCUIT DIAGRAM

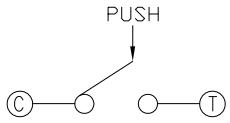

CODE TABLE

CODE TABLE (▨ =ON)

Terminal \ Angle	25° (24°)	(11°)	0°	(11°)	25° (24°)
①	▨	▨			
②	▨				
③					▨
④				▨	▨
Ⓒ	▨	▨	▨	▨	▨

CCW ← → CW

PRODUCT IMAGE

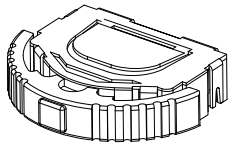

P.C.B MOUNTING PATTERN DIMENSION

The following soldering patterns are recommended for reflow soldering

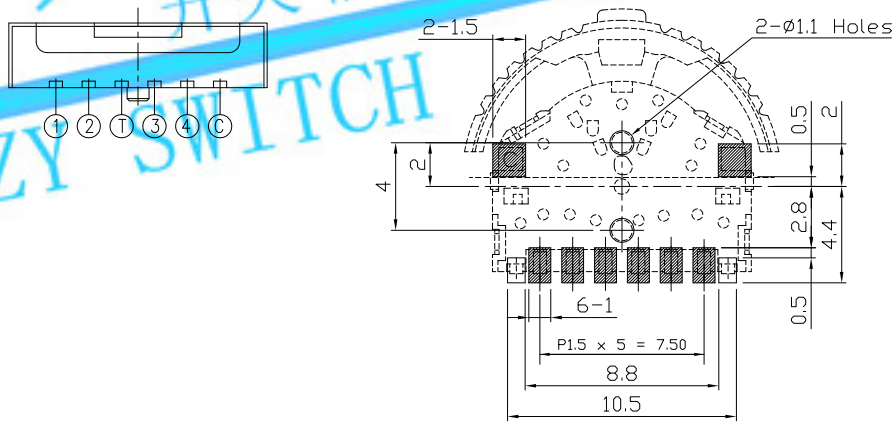

ELECTRO-MECHANICAL CHARACTERISTICS

Refer to additional specifications

Rating	DC 5V 10mA	
Output Voltage	1V Min. at 5V 1mA	
Operating Force	Lever	70±50gf
	Center	200±100gf
Travel	Lever	25°
	Center	0.7mm
Operating Life(cycles)	100,000	

龙创中业 开关 | 按键 | 连接器 LCZY SWITCH

.X ±0.2	X. ±2°	UNITS mm
		MAT'L SEE NOTE
		FINISH SEE NOTE
		Q'TY

THESE DRAWINGS AND SPECIFICATIONS ARE THE PROPERTY OF ACCURATE INNOTECH INC AND SHALL NOT BE REPRODUCED, COPIED OR USED IN ANY MANNER WITHOUT THE PRIOR WRITTEN CONSENT OF ACCURATE INNOTECH INC.

LONGCHUANG ZHONGYE (HK)CO.,LIMITED

TITLE: PUSH LEVER SWITCH	PART NO.: AL-1512 SERIES
DR: Ricky 2014/04/02	DWG NO.: ASI-1512
CHKD: Ricky 2014/04/02	SCALE 1:1 / SHEET 1/1 / REV. A / CUSTOMER DRAWING
APPD:	