Process Capable

RoHS Compliant 2002/95/EC

REV.	ECN. NO.	APPD.

DIMENSIONS

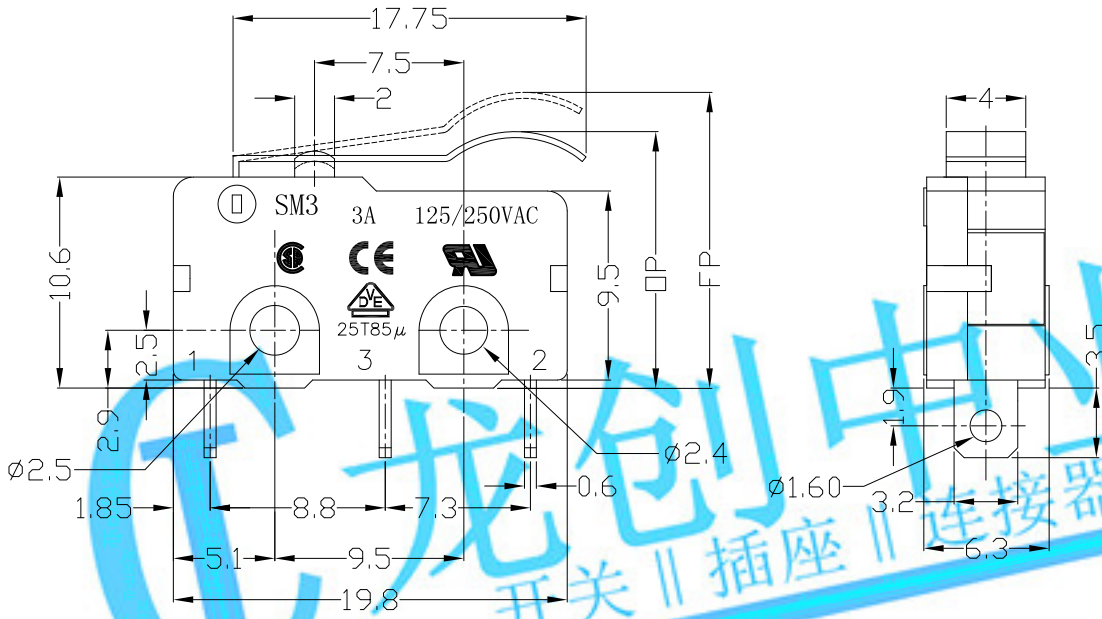

1.Functional spec

1.1 Rated Voltage(AC)	125/250VAC		
1.2 Rated Current(AC)	3A		
1.3 Contact Resistance	≤100mΩ(Initial value)		
1.4 Operating Force	38±20gf	55±25gf	75±25gf
1.5 Bounce Time			
1.6 Free Position	14.7±0.8mm		
1.7 Operating Position	12.5±0.8mm		
1.8 Position Travel			
1.9 Return Force			

2.Reliable Rating

2.1 Mechanical Life	1,000,000 CYCLES
2.2 Electrical Life	10,000 CYCLES
2.3 Insulation Resistance	≥100MΩ DC500V
2.4 Withstand Voltage	AC1000V 1 minute
2.5 Soldering Technic	Hand Soldering
2.6 Operating Temper	−25°C ~ +85°C
2.7 Ambient Humidity Used	<85%RH

龙创电业 开关‖插座‖连接器 LCZY SWITCH

MODEL CODE

SM 3 − 00 X − XX S − C31

1 2 3 4 5 6 7

1.Series：SM
2.Current Rating：3=3A 125/250VAC
3.Actuator：00=Non−lever 01−99=Lever
4.Termination：see chart (N/P/C/D)
(2=SPST−NO / 3=SPST−NC)
5.Operating Force：see chart
6.Spring Material:S=SUS304
7.Contact type: C31=3Amps Contact

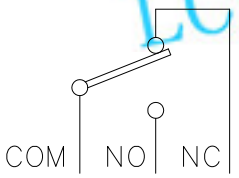

CIRCUIT DIAGRAM

Tolerance:±0.2	UNITS mm	LONGCHUANG ZHONGYE (HK)CO.,LIMITED
	MAT'L SEE NOTE	TITLE: MICRO SWITCH SM3 SERIES / PART NO.: SM3-06N-XXS-C31
	FINISH SEE NOTE	DR: Ricky 2017/4/11 / DWG NO.: ATD-06X-XXS-C31
	Q'TY	CHKD: Ricky 2017/4/11
		APPD:

SCALE	SHEET	REV.	
1:1	1/2	A	CUSTOMER DRAWING

THESE DRAWINGS AND SPECIFICATIONS ARE THE PROPERTY OF ACCURATE INNOTECH INC AND SHALL NOT BE REPRODUCED, COPIED OR USED IN ANY MANNER WITHOUT THE PRIOR WRITTEN CONSENT OF ACCURATE INNOTECH INC.