REV.	ECN. NO.	APPD.

Pb Process Capable

RoHS Compliant 2002/95/EC

30 Min /1m IP-67

DIMENSIONS

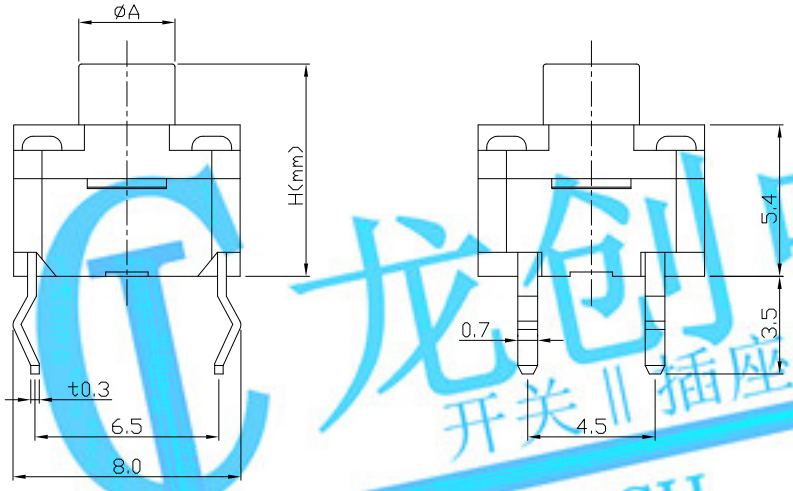

CIRCUIT DIAGRAM

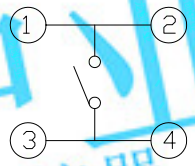

PRODUCT IMAGE

MODEL CODE

AT-1142-

	H	ØA
-	6.5	3.5
A	7.0	3.5
B	7.5	3.5
C	8.0	3.5
D	8.5	3.3
E	9.0	3.3
F	9.5	3.3
G	10.0	3.3
H	10.5	3.3
I	11.0	3.3
J	11.5	3.0
K	12.0	3.0
L	12.5	3.0
M	13.0	3.0
N	13.5	3.0
O	14.0	3.0
P	14.5	3.0
Q	15.0	3.0
R	15.5	3.0
S	16.0	3.0
T	16.5	3.0
U	17.0	3.0

P.C.B MOUNTING PATTERN DIMENSION

The following soldering patterns are recommended for reflow soldering

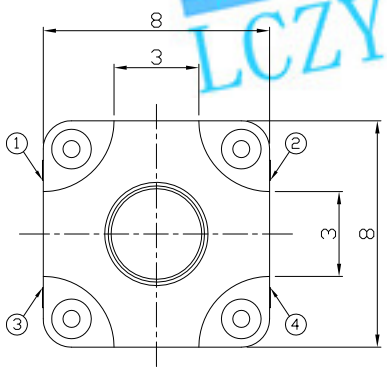

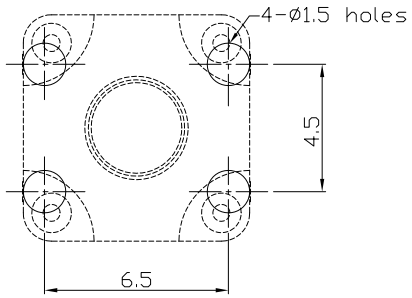

ELECTRO-MECHANICAL CHARACTERISTICS

Refer to additional specifications

Rating	DC 12V 50mA
Contact Resistance	100mΩ Max.
Insulation Resistance	100MΩ(DC 500V / 1 min) Min.
Withstanding Voltage	250 VAC / min.
Travel	0.25 ± 0.1mm
Operating Force	250±50gf
Operating Life(cycles)	100,000

龙创中业 开关 | 插座 | 连接器 LCZY SWITCH

.X ±0.3	X. ±2°	UNITS mm	LONGCHUANG ZHONGYE (HK)CO.,LIMITED
		MAT'L SEE NOTE	TITLE: TACT SWITCH / waterproof
		FINISH SEE NOTE	PART NO.: AT-1142 SERIES
		Q'TY	DR: Ricky 2017/03/23
			CHKD: Ricky 2017/03/23
			APPD:
			DWG NO.: ASI-1142
			SCALE 1:1 / SHEET 1/1 / REV. A / CUSTOMER DRAWING

THESE DRAWINGS AND SPECIFICATIONS ARE THE PROPERTY OF ACCURATE INNOTECH INC AND SHALL NOT BE REPRODUCED, COPIED OR USED IN ANY MANNER WITHOUT THE PRIOR WRITTEN CONSENT OF ACCURATE INNOTECH INC.