Pb Process Capable

RoHS Compliant 2002/95/EC

REV.	ECN. NO.	APPD.

DIMENSIONS

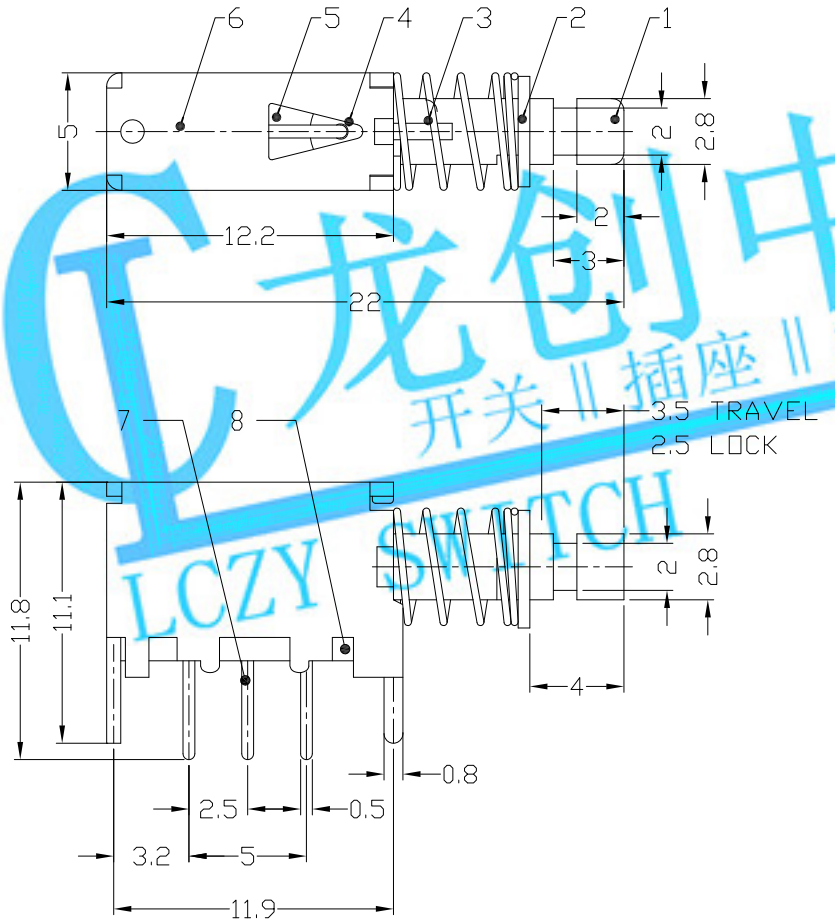

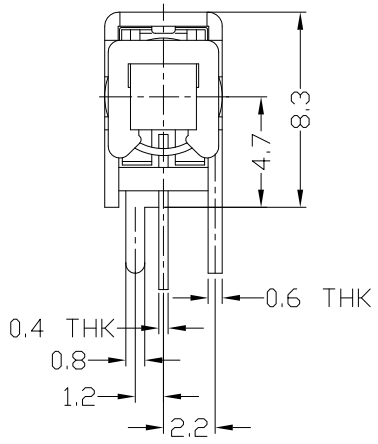

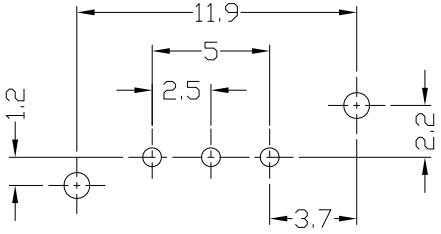

P.C.B LAYOUT

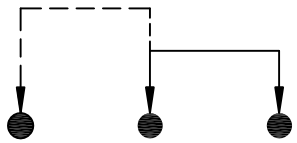

CIRCUIT DIAGRAM

龙创中业 开关 | 插座 | 连接器 LCZY SWITCH

ELECTRO-MECHANICAL CHARACTERISTICS

Refer to additional specifications

RATING	DC50V 0.3A	
CIRCUIT	1P2T	
CONTACT RESISTANCE	30mΩ MAX.	
TIMING	NON-SHORTING	
OPERATING MODE	SELF-LOCK	AP-12E05L
	NON-LOCK	AP-12E15N
STROKE	FULL 3.5mm	LOCK 2.5mm
OPERATING FORCE	250±100gf	
OPERATING LIFE(cycles)	10,000	

NO.	PARTS	MATERIAL	Q'TY	FINISHING
8	TERMINAL	BRASS STRIP	3	Ag PLATED OVER Ni PLATED
7	BASE	PHENOLIC RESIN	1	NATURAL
6	FRAME	STEEL STRIP	1	Ni PLATED
5	LOCK NEEDLE	PBS WIRE	1	NATURAL
4	SPRING PLATE	PBS STRIP	1	NATURAL
3	SPRING	STAINLESS STEEL	1	TEMPER
2	BLOCK	STEEL STRIP	1	Ni PLATED
1	KNOB	POM	1	BLUE

WITHIN 1.5mm: ±0.1mm
OVER 1.5mm: ±0.2mm

THESE DRAWINGS AND SPECIFICATIONS ARE THE PROPERTY OF ACCURATE INNOTECH INC AND SHALL NOT BE REPRODUCED, COPIED OR USED IN ANY MANNER WITHOUT THE PRIOR WRITTEN CONSENT OF ACCURATE INNOTECH INC.

UNITS mm
MAT'L SEE NOTE
FINISH SEE NOTE
Q'TY

LONGCHUANG ZHONGYE (HK)CO.,LIMITED

TITLE: PUSH SWITCH / HORIZONTAL	PART NO.: AP-12E05L & AP-12E15N
DR: Ricky 2014/05/06	DWG NO.: ADJ-12E0515
CHKD: Ricky 2014/05/06	SCALE 3:1 / SHEET 1/1 / REV. A / CUSTOMER DRAWING
APPD:	